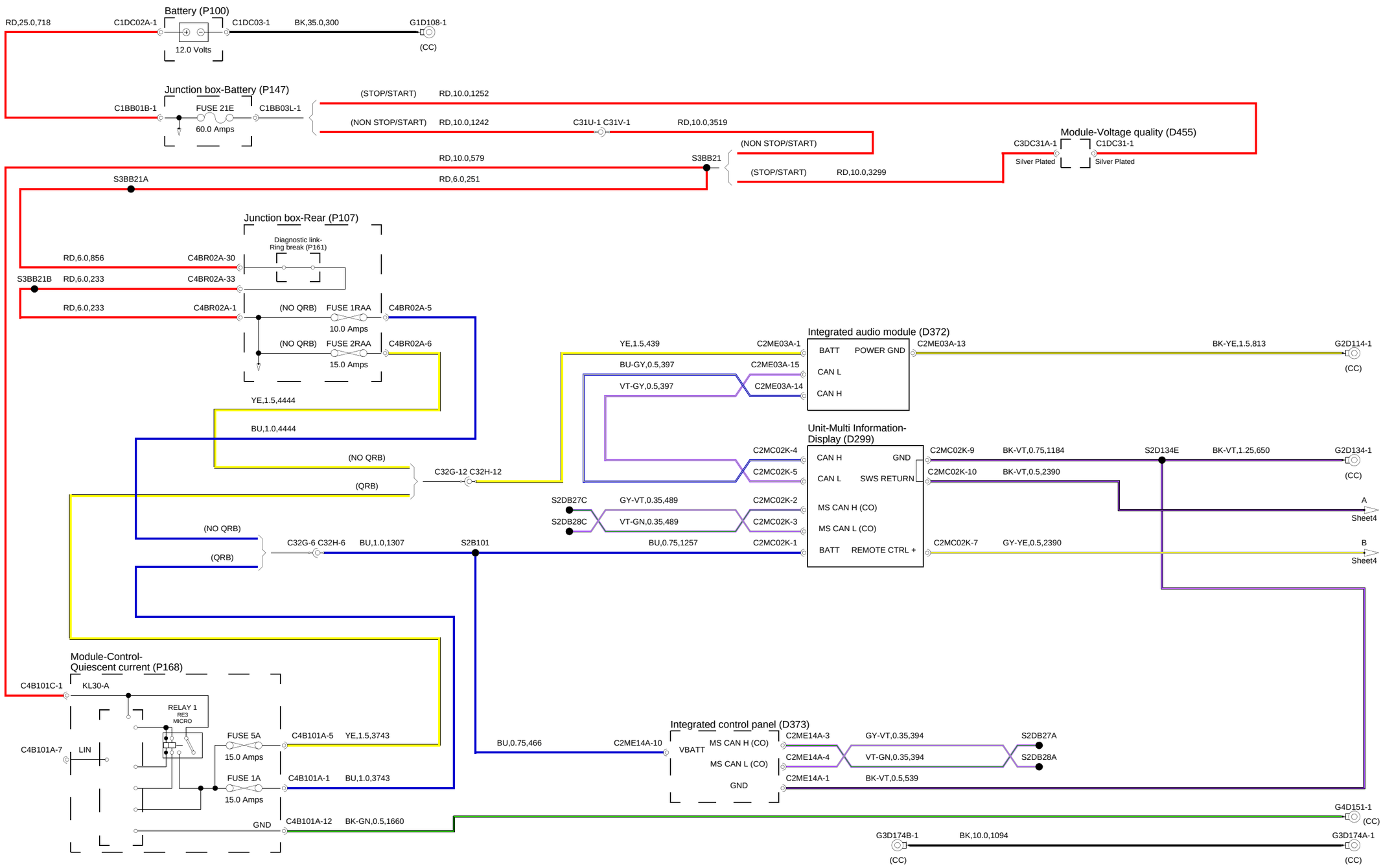
Battery (P100)
RD,25.0,718
C1DC02A-1
C1DC03-1
BK,35.0,300
G1D108-1
12.0 Volts
(CC)
Junction box-Battery (P147)
C1BB01B-1
FUSE 21E
C1BB03L-1
60.0 Amps
(STOP/START)
RD,10.0,1252
(NON STOP/START)
RD,10.0,1242
C31U-1 C31V-1
RD,10.0,3519
Module-Voltage quality (D455)
C3DC31A-1
C1DC31-1
Silver Plated
Silver Plated
(NON STOP/START)
RD,10.0,579
S3BB21
(STOP/START)
RD,10.0,3299
S3BB21A
RD,6.0,251
Junction box-Rear (P107)
Diagnostic link-
Ring break (P161)
RD,6.0,856
C4BR02A-30
S3BB21B
RD,6.0,233
C4BR02A-33
RD,6.0,233
C4BR02A-1
(NO QRB)
FUSE 1RAA
C4BR02A-5
10.0 Amps
(NO QRB)
FUSE 2RAA
C4BR02A-6
15.0 Amps
YE,1.5,4444
BU,1.0,4444
(NO QRB)
(QRB)
C32G-12 C32H-12
Integrated audio module (D372)
YE,1.5,439
C2ME03A-1
BATT
POWER GND
C2ME03A-13
BK-YE,1.5,813
G2D114-1
(CC)
BU-GY,0.5,397
C2ME03A-15
CAN L
VT-GY,0.5,397
C2ME03A-14
CAN H
Unit-Multi Information-
Display (D299)
C2MC02K-4
CAN H
GND
C2MC02K-9
BK-VT,0.75,1184
S2D134E
BK-VT,1.25,650
G2D134-1
(CC)
C2MC02K-5
CAN L
SWS RETURN
C2MC02K-10
BK-VT,0.5,2390
S2DB27C
GY-VT,0.35,489
C2MC02K-2
MS CAN H (CO)
A
Sheet4
S2DB28C
VT-GN,0.35,489
C2MC02K-3
MS CAN L (CO)
(NO QRB)
C32G-6 C32H-6
BU,1.0,1307
S2B101
BU,0.75,1257
C2MC02K-1
BATT
REMOTE CTRL +
C2MC02K-7
GY-YE,0.5,2390
B
Sheet4
(QRB)
Module-Control-
Quiescent current (P168)
C4B101C-1
KL30-A
RELAY 1
RE3
MICRO
C4B101A-7
LIN
FUSE 5A
15.0 Amps
C4B101A-5
YE,1.5,3743
FUSE 1A
15.0 Amps
C4B101A-1
BU,1.0,3743
GND
C4B101A-12
BK-GN,0.5,1660
BU,0.75,466
C2ME14A-10
Integrated control panel (D373)
VBATT
MS CAN H (CO)
C2ME14A-3
GY-VT,0.35,394
S2DB27A
MS CAN L (CO)
C2ME14A-4
VT-GN,0.35,394
S2DB28A
GND
C2ME14A-1
BK-VT,0.5,539
G4D151-1
(CC)
G3D174B-1
BK,10.0,1094
G3D174A-1
(CC)
(CC)

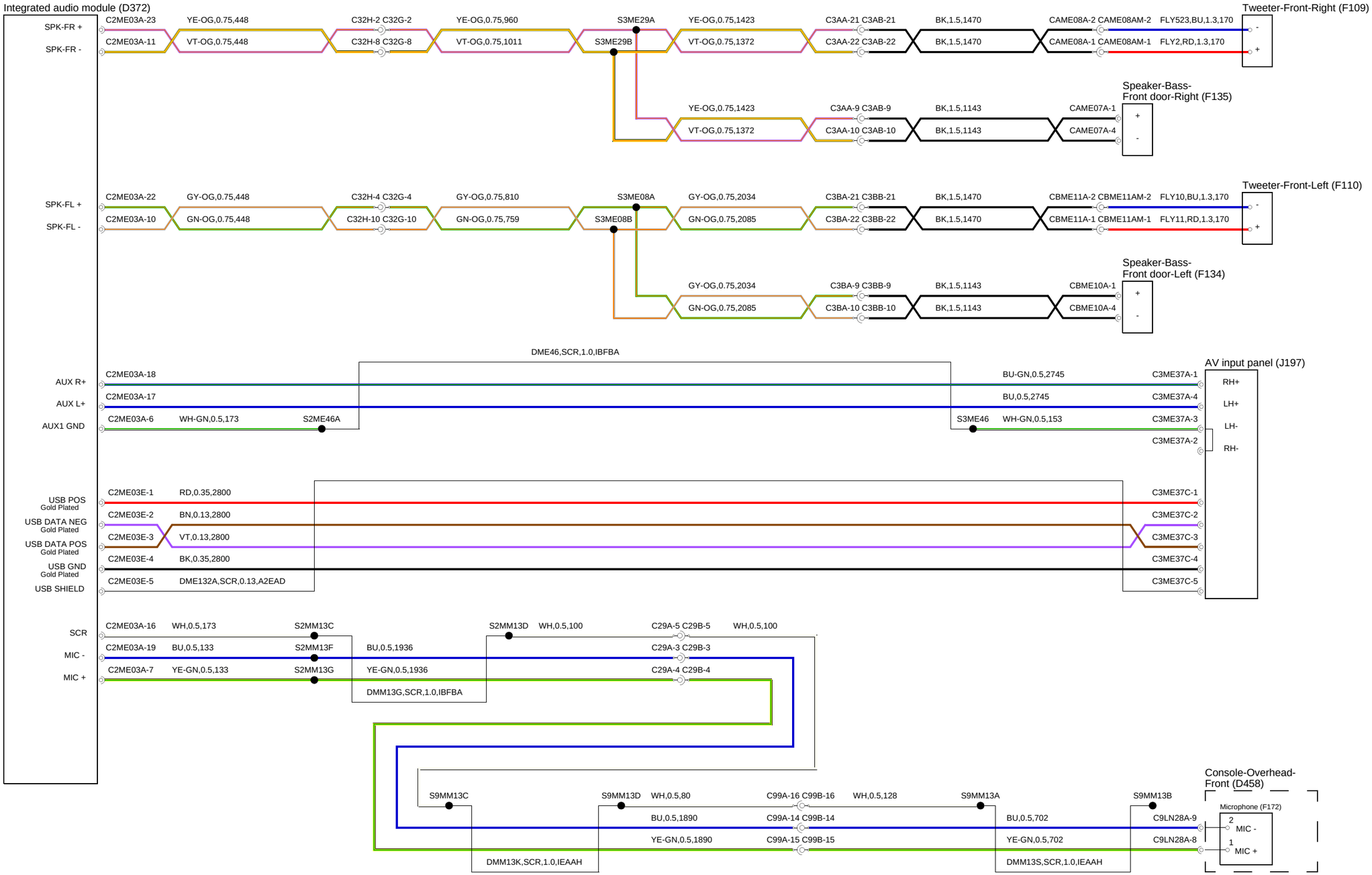
Integrated audio module (D372)
SPK-FR +
SPK-FR -
C2ME03A-23
YE-OG,0.75,448
C32H-2 C32G-2
YE-OG,0.75,960
S3ME29A
YE-OG,0.75,1423
C3AA-21 C3AB-21
BK,1.5,1470
CAME08A-2 CAME08AM-2
FLY523,BU,1.3,170
Tweeter-Front-Right (F109)
C2ME03A-11
VT-OG,0.75,448
C32H-8 C32G-8
VT-OG,0.75,1011
S3ME29B
VT-OG,0.75,1372
C3AA-22 C3AB-22
BK,1.5,1470
CAME08A-1 CAME08AM-1
FLY2,RD,1.3,170
Speaker-Bass-
Front door-Right (F135)
YE-OG,0.75,1423
C3AA-9 C3AB-9
BK,1.5,1143
CAME07A-1
VT-OG,0.75,1372
C3AA-10 C3AB-10
BK,1.5,1143
CAME07A-4
SPK-FL +
SPK-FL -
C2ME03A-22
GY-OG,0.75,448
C32H-4 C32G-4
GY-OG,0.75,810
S3ME08A
GY-OG,0.75,2034
C3BA-21 C3BB-21
BK,1.5,1470
CBME11A-2 CBME11AM-2
FLY10,BU,1.3,170
Tweeter-Front-Left (F110)
C2ME03A-10
GN-OG,0.75,448
C32H-10 C32G-10
GN-OG,0.75,759
S3ME08B
GN-OG,0.75,2085
C3BA-22 C3BB-22
BK,1.5,1470
CBME11A-1 CBME11AM-1
FLY11,RD,1.3,170
Speaker-Bass-
Front door-Left (F134)
GY-OG,0.75,2034
C3BA-9 C3BB-9
BK,1.5,1143
CBME10A-1
GN-OG,0.75,2085
C3BA-10 C3BB-10
BK,1.5,1143
CBME10A-4
DME46,SCR,1.0,IBFBA
AV input panel (J197)
AUX R+
AUX L+
AUX1 GND
C2ME03A-18
BU-GN,0.5,2745
C3ME37A-1
RH+
C2ME03A-17
BU,0.5,2745
C3ME37A-4
LH+
C2ME03A-6
WH-GN,0.5,173
S2ME46A
S3ME46
WH-GN,0.5,153
C3ME37A-3
LH-
C3ME37A-2
RH-
USB POS
Gold Plated
USB DATA NEG
Gold Plated
USB DATA POS
Gold Plated
USB GND
Gold Plated
USB SHIELD
C2ME03E-1
RD,0.35,2800
C3ME37C-1
C2ME03E-2
BN,0.13,2800
C3ME37C-2
C2ME03E-3
VT,0.13,2800
C3ME37C-3
C2ME03E-4
BK,0.35,2800
C3ME37C-4
C2ME03E-5
DME132A,SCR,0.13,A2EAD
C3ME37C-5
SCR
MIC -
MIC +
C2ME03A-16
WH,0.5,173
S2MM13C
S2MM13D
WH,0.5,100
C29A-5 C29B-5
WH,0.5,100
C2ME03A-19
BU,0.5,133
S2MM13F
BU,0.5,1936
C29A-3 C29B-3
C2ME03A-7
YE-GN,0.5,133
S2MM13G
YE-GN,0.5,1936
C29A-4 C29B-4
DMM13G,SCR,1.0,IBFBA
Console-Overhead-
Front (D458)
S9MM13C
S9MM13D
WH,0.5,80
C99A-16 C99B-16
WH,0.5,128
S9MM13A
S9MM13B
Microphone (F172)
BU,0.5,1890
C99A-14 C99B-14
BU,0.5,702
C9LN28A-9
2
MIC -
YE-GN,0.5,1890
C99A-15 C99B-15
YE-GN,0.5,702
C9LN28A-8
1
MIC +
DMM13K,SCR,1.0,IEAAH
DMM13S,SCR,1.0,IEAAH

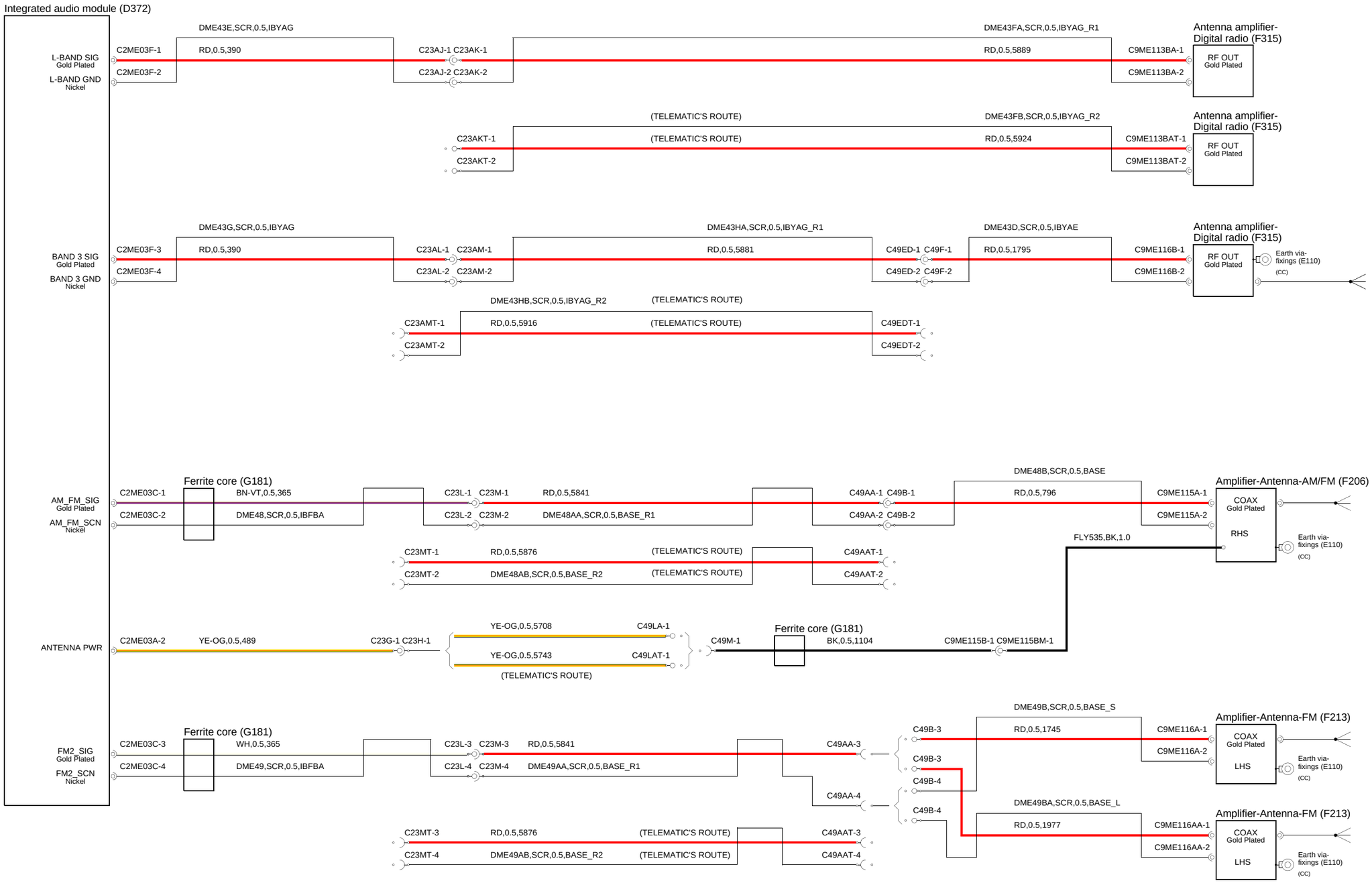
Integrated audio module (D372)
L-BAND SIG
Gold Plated
L-BAND GND
Nickel
C2ME03F-1
C2ME03F-2
DME43E,SCR,0.5,IBYAG
RD,0.5,390
C23AJ-1 C23AK-1
C23AJ-2 C23AK-2
DME43FA,SCR,0.5,IBYAG_R1
RD,0.5,5889
C9ME113BA-1
C9ME113BA-2
Antenna amplifier-
Digital radio (F315)
RF OUT
Gold Plated
(TELEMATIC'S ROUTE)
C23AKT-1
C23AKT-2
DME43FB,SCR,0.5,IBYAG_R2
RD,0.5,5924
C9ME113BAT-1
C9ME113BAT-2
BAND 3 SIG
Gold Plated
BAND 3 GND
Nickel
C2ME03F-3
C2ME03F-4
DME43G,SCR,0.5,IBYAG
RD,0.5,390
C23AL-1 C23AM-1
C23AL-2 C23AM-2
DME43HA,SCR,0.5,IBYAG_R1
RD,0.5,5881
C49ED-1 C49F-1
C49ED-2 C49F-2
DME43D,SCR,0.5,IBYAE
RD,0.5,1795
C9ME116B-1
C9ME116B-2
Earth via-
fixings (E110)
(CC)
DME43HB,SCR,0.5,IBYAG_R2
C23AMT-1
C23AMT-2
RD,0.5,5916
C49EDT-1
C49EDT-2
AM_FM_SIG
Gold Plated
AM_FM_SCN
Nickel
C2ME03C-1
C2ME03C-2
Ferrite core (G181)
BN-VT,0.5,365
DME48,SCR,0.5,IBFBA
C23L-1 C23M-1
C23L-2 C23M-2
RD,0.5,5841
DME48AA,SCR,0.5,BASE_R1
C49AA-1 C49B-1
C49AA-2 C49B-2
DME48B,SCR,0.5,BASE
RD,0.5,796
C9ME115A-1
C9ME115A-2
Amplifier-Antenna-AM/FM (F206)
COAX
Gold Plated
RHS
C23MT-1
C23MT-2
RD,0.5,5876
DME48AB,SCR,0.5,BASE_R2
C49AAT-1
C49AAT-2
FLY535,BK,1.0
ANTENNA PWR
C2ME03A-2
YE-OG,0.5,489
C23G-1 C23H-1
YE-OG,0.5,5708
YE-OG,0.5,5743
C49LA-1
C49LAT-1
C49M-1
BK,0.5,1104
C9ME115B-1 C9ME115BM-1
FM2_SIG
Gold Plated
FM2_SCN
Nickel
C2ME03C-3
C2ME03C-4
WH,0.5,365
DME49,SCR,0.5,IBFBA
C23L-3 C23M-3
C23L-4 C23M-4
DME49AA,SCR,0.5,BASE_R1
C49AA-3
C49AA-4
C49B-3
C49B-4
DME49B,SCR,0.5,BASE_S
RD,0.5,1745
C9ME116A-1
C9ME116A-2
Amplifier-Antenna-FM (F213)
LHS
DME49BA,SCR,0.5,BASE_L
RD,0.5,1977
C9ME116AA-1
C9ME116AA-2
C23MT-3
C23MT-4
DME49AB,SCR,0.5,BASE_R2
C49AAT-3
C49AAT-4

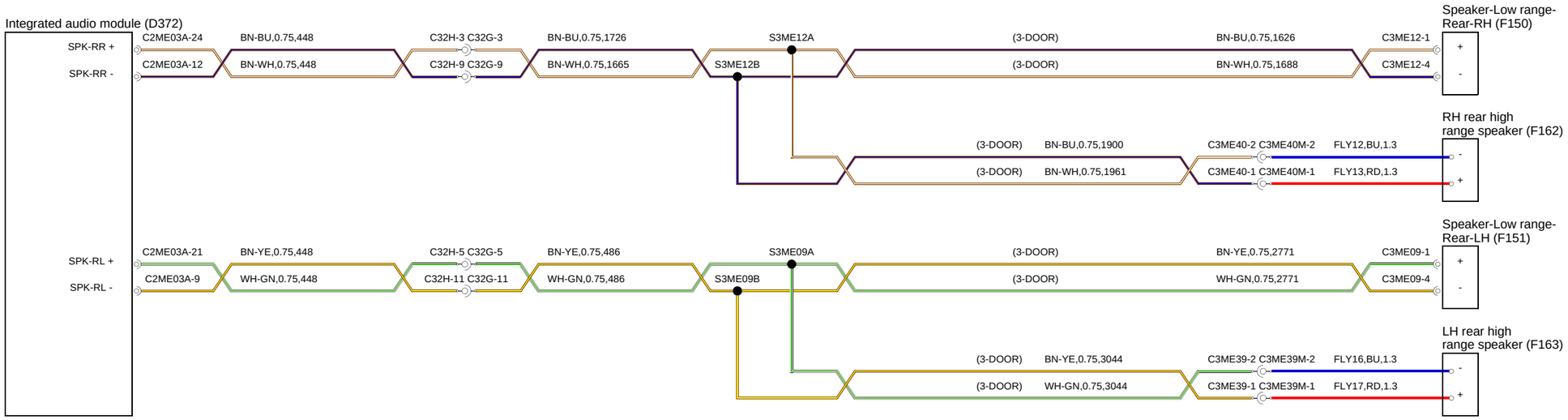
Integrated audio module (D372)
SPK-RR +
SPK-RR -
C2ME03A-24
C2ME03A-12
BN-BU,0.75,448
BN-WH,0.75,448
C32H-3 C32G-3
C32H-9 C32G-9
BN-BU,0.75,1726
BN-WH,0.75,1665
S3ME12A
S3ME12B
(3-DOOR)
BN-BU,0.75,1626
BN-WH,0.75,1688
C3ME12-1
C3ME12-4
Speaker-Low range-Rear-RH (F150)
(3-DOOR)
BN-BU,0.75,1900
BN-WH,0.75,1961
C3ME40-2 C3ME40M-2
C3ME40-1 C3ME40M-1
FLY12,BU,1.3
FLY13,RD,1.3
RH rear high range speaker (F162)
SPK-RL +
SPK-RL -
C2ME03A-21
C2ME03A-9
BN-YE,0.75,448
WH-GN,0.75,448
C32H-5 C32G-5
C32H-11 C32G-11
BN-YE,0.75,486
WH-GN,0.75,486
S3ME09A
S3ME09B
(3-DOOR)
BN-YE,0.75,2771
WH-GN,0.75,2771
C3ME09-1
C3ME09-4
Speaker-Low range-Rear-LH (F151)
(3-DOOR)
BN-YE,0.75,3044
WH-GN,0.75,3044
C3ME39-2 C3ME39M-2
C3ME39-1 C3ME39M-1
FLY16,BU,1.3
FLY17,RD,1.3
LH rear high range speaker (F163)

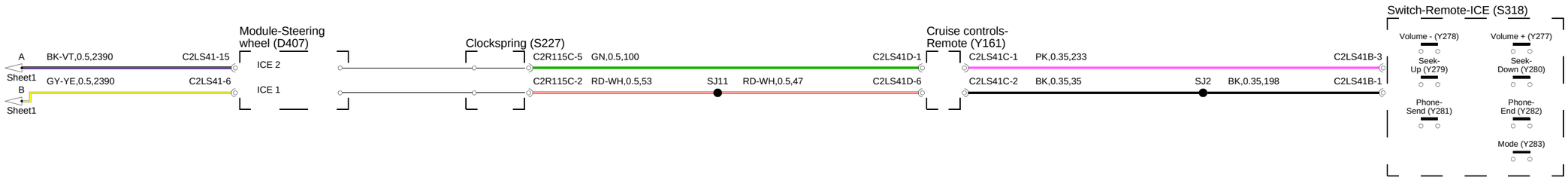
A
Sheet1
BK-VT,0.5,2390
C2LS41-15
B
Sheet1
GY-YE,0.5,2390
C2LS41-6
Module-Steering wheel (D407)
ICE 2
ICE 1
Clockspring (S227)
C2R115C-5
GN,0.5,100
C2LS41D-1
C2R115C-2
RD-WH,0.5,53
SJ11
RD-WH,0.5,47
C2LS41D-6
Cruise controls-Remote (Y161)
C2LS41C-1
PK,0.35,233
C2LS41C-2
BK,0.35,35
SJ2
BK,0.35,198
C2LS41B-3
C2LS41B-1
Switch-Remote-ICE (S318)
Volume - (Y278)
Volume + (Y277)
Seek-Up (Y279)
Seek-Down (Y280)
Phone-Send (Y281)
Phone-End (Y282)
Mode (Y283)

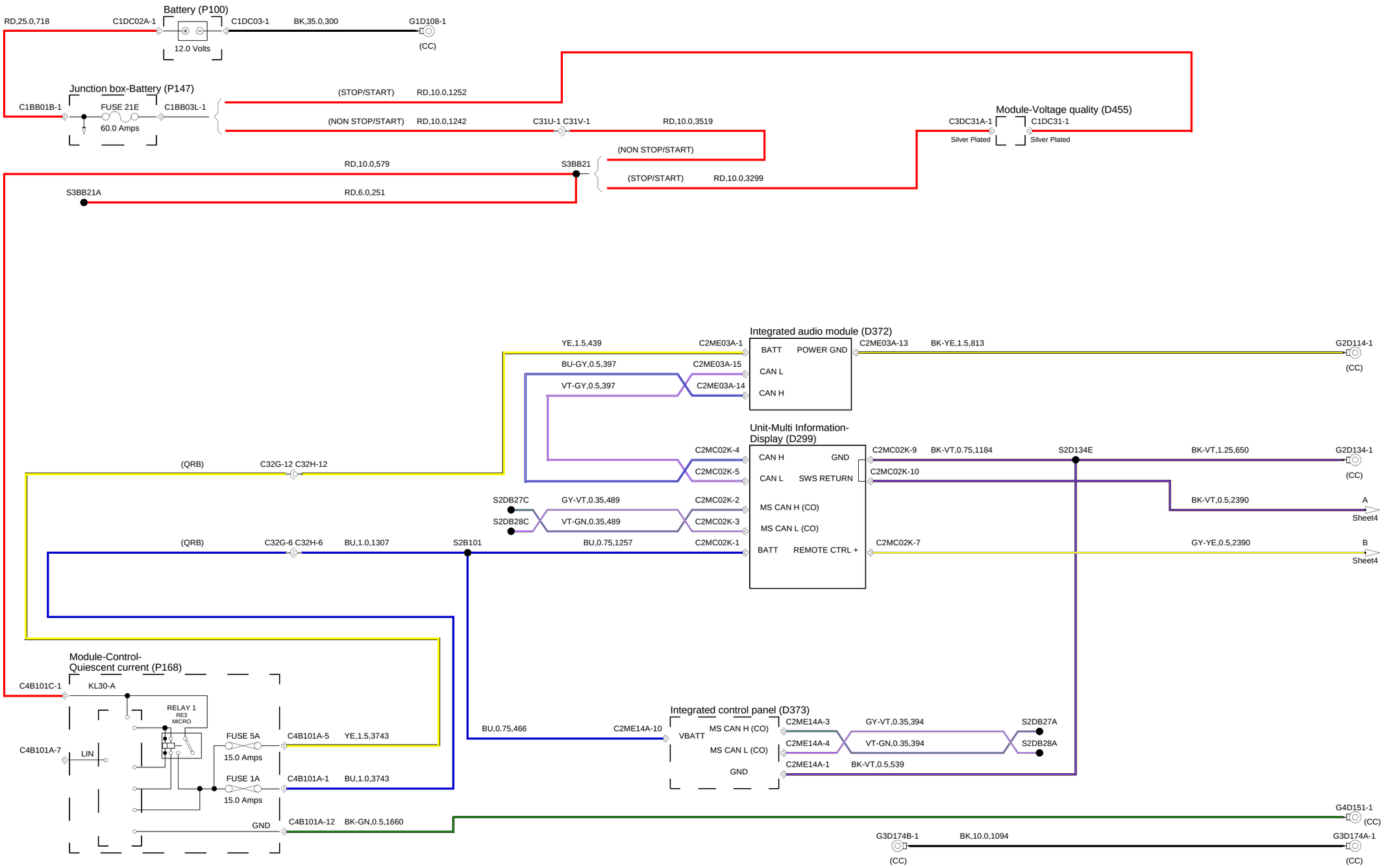
Battery (P100)
RD,25.0,718
C1DC02A-1
C1DC03-1
BK,35.0,300
G1D108-1
(CC)
12.0 Volts
Junction box-Battery (P147)
C1BB01B-1
FUSE 21E
60.0 Amps
C1BB03L-1
(STOP/START)
RD,10.0,1252
(NON STOP/START)
RD,10.0,1242
C31U-1 C31V-1
RD,10.0,3519
Module-Voltage quality (D455)
C3DC31A-1
C1DC31-1
Silver Plated
Silver Plated
(NON STOP/START)
RD,10.0,579
S3BB21
(STOP/START)
RD,10.0,3299
S3BB21A
RD,6.0,251
Integrated audio module (D372)
YE,1.5,439
C2ME03A-1
BATT
POWER GND
C2ME03A-13
BK-YE,1.5,813
G2D114-1
(CC)
BU-GY,0.5,397
C2ME03A-15
CAN L
VT-GY,0.5,397
C2ME03A-14
CAN H
Unit-Multi Information-Display (D299)
C2MC02K-4
CAN H
GND
C2MC02K-9
BK-VT,0.75,1184
S2D134E
BK-VT,1.25,650
G2D134-1
(CC)
C2MC02K-5
CAN L
SWS RETURN
C2MC02K-10
BK-VT,0.5,2390
A
Sheet4
(QRB)
C32G-12 C32H-12
S2DB27C
GY-VT,0.35,489
C2MC02K-2
MS CAN H (CO)
S2DB28C
VT-GN,0.35,489
C2MC02K-3
MS CAN L (CO)
(QRB)
C32G-6 C32H-6
BU,1.0,1307
S2B101
BU,0.75,1257
C2MC02K-1
BATT
REMOTE CTRL +
C2MC02K-7
GY-YE,0.5,2390
B
Sheet4
Module-Control-Quiescent current (P168)
C4B101C-1
KL30-A
RELAY 1
RE3
MICRO
C4B101A-7
LIN
FUSE 5A
15.0 Amps
C4B101A-5
YE,1.5,3743
FUSE 1A
15.0 Amps
C4B101A-1
BU,1.0,3743
GND
C4B101A-12
BK-GN,0.5,1660
BU,0.75,466
C2ME14A-10
Integrated control panel (D373)
VBATT
MS CAN H (CO)
MS CAN L (CO)
GND
C2ME14A-3
GY-VT,0.35,394
S2DB27A
C2ME14A-4
VT-GN,0.35,394
S2DB28A
C2ME14A-1
BK-VT,0.5,539
G4D151-1
(CC)
G3D174B-1
BK,10.0,1094
G3D174A-1
(CC)
(CC)

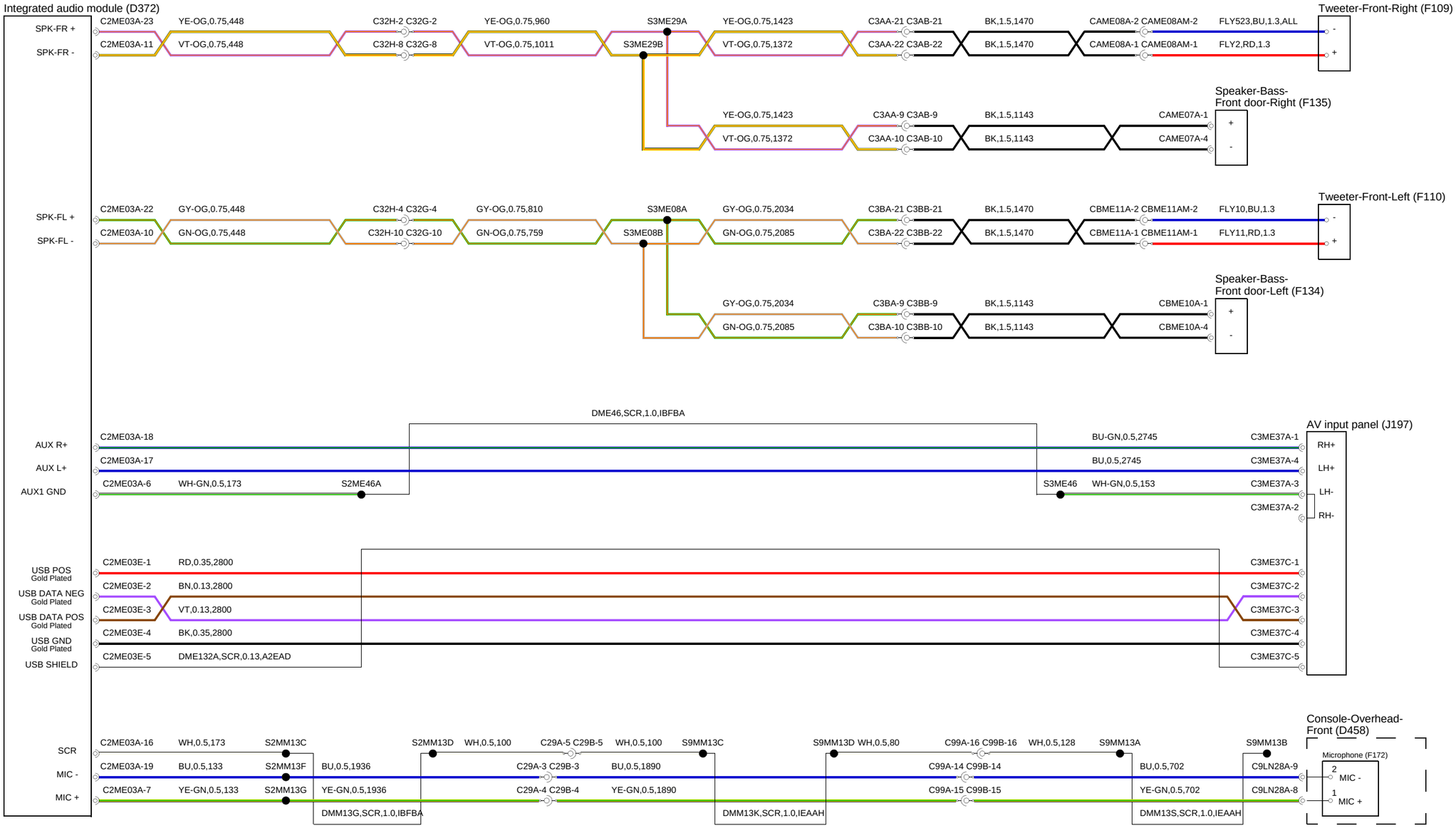
Integrated audio module (D372)
SPK-FR +
SPK-FR -
C2ME03A-23
C2ME03A-11
YE-OG,0.75,448
VT-OG,0.75,448
C32H-2 C32G-2
C32H-8 C32G-8
YE-OG,0.75,960
VT-OG,0.75,1011
S3ME29A
S3ME29B
YE-OG,0.75,1423
VT-OG,0.75,1372
C3AA-21 C3AB-21
C3AA-22 C3AB-22
BK,1.5,1470
CAME08A-2 CAME08AM-2
CAME08A-1 CAME08AM-1
FLY523,BU,1.3,ALL
FLY2,RD,1.3
Tweeter-Front-Right (F109)
Speaker-Bass-
Front door-Right (F135)
C3AA-9 C3AB-9
C3AA-10 C3AB-10
BK,1.5,1143
CAME07A-1
CAME07A-4
SPK-FL +
SPK-FL -
C2ME03A-22
C2ME03A-10
GY-OG,0.75,448
GN-OG,0.75,448
C32H-4 C32G-4
C32H-10 C32G-10
GY-OG,0.75,810
GN-OG,0.75,759
S3ME08A
S3ME08B
GY-OG,0.75,2034
GN-OG,0.75,2085
C3BA-21 C3BB-21
C3BA-22 C3BB-22
CBME11A-2 CBME11AM-2
CBME11A-1 CBME11AM-1
FLY10,BU,1.3
FLY11,RD,1.3
Tweeter-Front-Left (F110)
Speaker-Bass-
Front door-Left (F134)
C3BA-9 C3BB-9
C3BA-10 C3BB-10
CBME10A-1
CBME10A-4
DME46,SCR,1.0,IBFBA
AV input panel (J197)
AUX R+
AUX L+
AUX1 GND
C2ME03A-18
C2ME03A-17
C2ME03A-6
WH-GN,0.5,173
S2ME46A
S3ME46
BU-GN,0.5,2745
BU,0.5,2745
WH-GN,0.5,153
C3ME37A-1
C3ME37A-4
C3ME37A-3
C3ME37A-2
RH+
LH+
LH-
RH-
USB POS
Gold Plated
USB DATA NEG
Gold Plated
USB DATA POS
Gold Plated
USB GND
Gold Plated
USB SHIELD
C2ME03E-1
C2ME03E-2
C2ME03E-3
C2ME03E-4
C2ME03E-5
RD,0.35,2800
BN,0.13,2800
VT,0.13,2800
BK,0.35,2800
DME132A,SCR,0.13,A2EAD
C3ME37C-1
C3ME37C-2
C3ME37C-3
C3ME37C-4
C3ME37C-5
Console-Overhead-
Front (D458)
Microphone (F172)
SCR
MIC -
MIC +
C2ME03A-16
C2ME03A-19
C2ME03A-7
WH,0.5,173
BU,0.5,133
YE-GN,0.5,133
S2MM13C
S2MM13F
S2MM13G
BU,0.5,1936
YE-GN,0.5,1936
DMM13G,SCR,1.0,IBFBA
S2MM13D
WH,0.5,100
C29A-5 C29B-5
C29A-3 C29B-3
C29A-4 C29B-4
BU,0.5,1890
YE-GN,0.5,1890
S9MM13C
DMM13K,SCR,1.0,IEAAH
S9MM13D WH,0.5,80
C99A-16 C99B-16
C99A-14 C99B-14
C99A-15 C99B-15
WH,0.5,128
S9MM13A
BU,0.5,702
YE-GN,0.5,702
DMM13S,SCR,1.0,IEAAH
S9MM13B
C9LN28A-9
C9LN28A-8
2
MIC -
1
MIC +

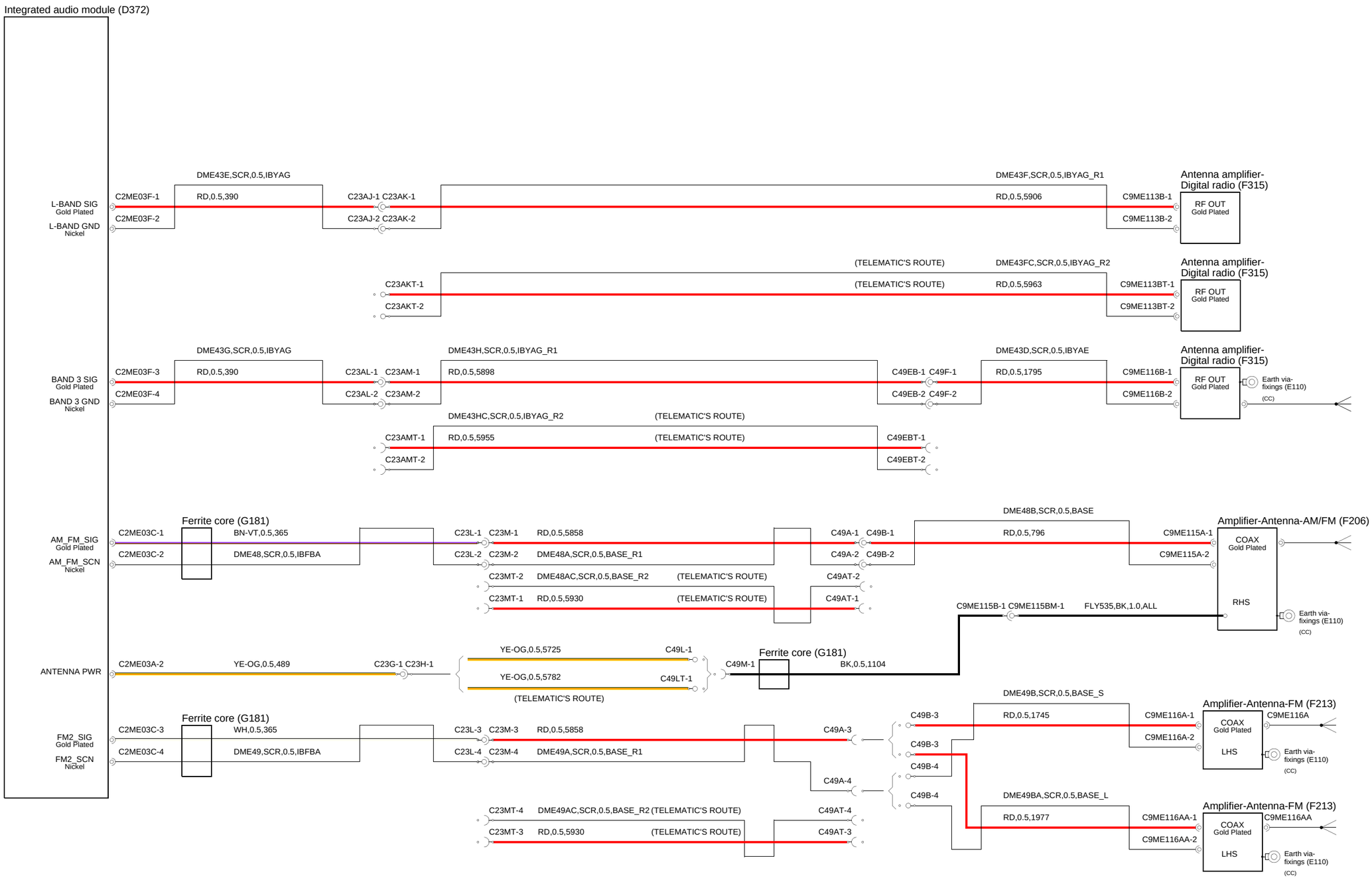
Integrated audio module (D372)
L-BAND SIG
Gold Plated
L-BAND GND
Nickel
C2ME03F-1
C2ME03F-2
DME43E,SCR,0.5,IBYAG
RD,0.5,390
C23AJ-1 C23AK-1
C23AJ-2 C23AK-2
DME43F,SCR,0.5,IBYAG_R1
RD,0.5,5906
C9ME113B-1
C9ME113B-2
Antenna amplifier-
Digital radio (F315)
RF OUT
Gold Plated
C23AKT-1
C23AKT-2
(TELEMATIC'S ROUTE)
DME43FC,SCR,0.5,IBYAG_R2
RD,0.5,5963
C9ME113BT-1
C9ME113BT-2
BAND 3 SIG
Gold Plated
BAND 3 GND
Nickel
C2ME03F-3
C2ME03F-4
DME43G,SCR,0.5,IBYAG
RD,0.5,390
C23AL-1 C23AM-1
C23AL-2 C23AM-2
DME43H,SCR,0.5,IBYAG_R1
RD,0.5,5898
C49EB-1 C49F-1
C49EB-2 C49F-2
DME43D,SCR,0.5,IBYAE
RD,0.5,1795
C9ME116B-1
C9ME116B-2
Earth via-
fixings (E110)
(CC)
DME43HC,SCR,0.5,IBYAG_R2
C23AMT-1
C23AMT-2
RD,0.5,5955
C49EBT-1
C49EBT-2
AM_FM_SIG
Gold Plated
AM_FM_SCN
Nickel
C2ME03C-1
C2ME03C-2
Ferrite core (G181)
BN-VT,0.5,365
DME48,SCR,0.5,IBFBA
C23L-1 C23M-1
C23L-2 C23M-2
RD,0.5,5858
DME48A,SCR,0.5,BASE_R1
C49A-1 C49B-1
C49A-2 C49B-2
DME48B,SCR,0.5,BASE
RD,0.5,796
C9ME115A-1
C9ME115A-2
Amplifier-Antenna-AM/FM (F206)
COAX
Gold Plated
RHS
C23MT-2
DME48AC,SCR,0.5,BASE_R2
C23MT-1
RD,0.5,5930
C49AT-2
C49AT-1
C9ME115B-1 C9ME115BM-1
FLY535,BK,1.0,ALL
ANTENNA PWR
C2ME03A-2
YE-OG,0.5,489
C23G-1 C23H-1
YE-OG,0.5,5725
YE-OG,0.5,5782
C49L-1
C49LT-1
C49M-1
BK,0.5,1104
FM2_SIG
Gold Plated
FM2_SCN
Nickel
C2ME03C-3
C2ME03C-4
WH,0.5,365
DME49,SCR,0.5,IBFBA
C23L-3 C23M-3
C23L-4 C23M-4
DME49A,SCR,0.5,BASE_R1
C49A-3
C49A-4
C49B-3
C49B-4
DME49B,SCR,0.5,BASE_S
RD,0.5,1745
C9ME116A-1
C9ME116A-2
Amplifier-Antenna-FM (F213)
C9ME116A
LHS
C23MT-4
DME49AC,SCR,0.5,BASE_R2
C23MT-3
RD,0.5,5930
C49AT-4
C49AT-3
DME49BA,SCR,0.5,BASE_L
RD,0.5,1977
C9ME116AA-1
C9ME116AA-2
C9ME116AA

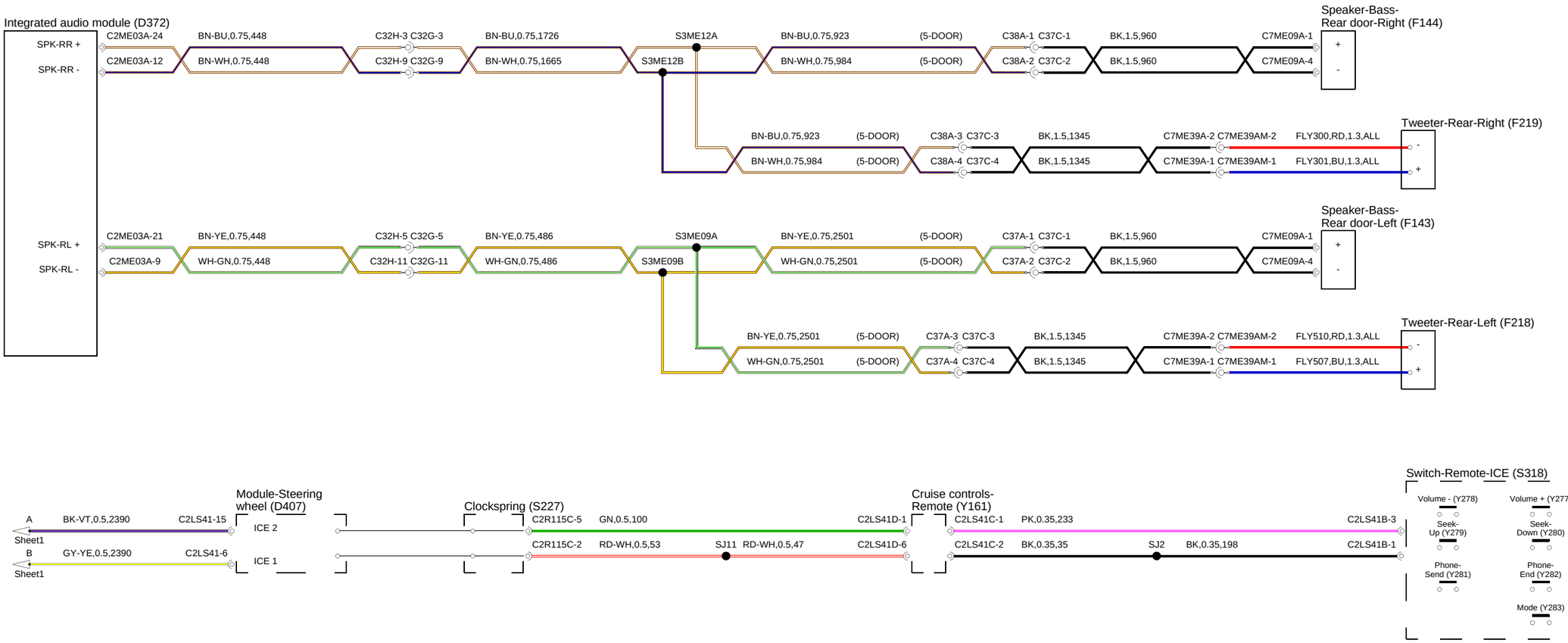
Integrated audio module (D372)
SPK-RR +
SPK-RR -
C2ME03A-24
C2ME03A-12
BN-BU,0.75,448
BN-WH,0.75,448
C32H-3 C32G-3
C32H-9 C32G-9
BN-BU,0.75,1726
BN-WH,0.75,1665
S3ME12A
S3ME12B
BN-BU,0.75,923
BN-WH,0.75,984
(5-DOOR)
C38A-1 C37C-1
C38A-2 C37C-2
BK,1.5,960
C7ME09A-1
C7ME09A-4
Speaker-Bass-
Rear door-Right (F144)
C38A-3 C37C-3
C38A-4 C37C-4
BK,1.5,1345
C7ME39A-2 C7ME39AM-2
C7ME39A-1 C7ME39AM-1
FLY300,RD,1.3,ALL
FLY301,BU,1.3,ALL
Tweeter-Rear-Right (F219)
SPK-RL +
SPK-RL -
C2ME03A-21
C2ME03A-9
BN-YE,0.75,448
WH-GN,0.75,448
C32H-5 C32G-5
C32H-11 C32G-11
BN-YE,0.75,486
WH-GN,0.75,486
S3ME09A
S3ME09B
BN-YE,0.75,2501
WH-GN,0.75,2501
C37A-1 C37C-1
C37A-2 C37C-2
Speaker-Bass-
Rear door-Left (F143)
C37A-3 C37C-3
C37A-4 C37C-4
FLY510,RD,1.3,ALL
FLY507,BU,1.3,ALL
Tweeter-Rear-Left (F218)


A
BK-VT,0.5,2390
C2LS41-15
Sheet1
B
GY-YE,0.5,2390
C2LS41-6
Sheet1
Module-Steering
wheel (D407)
ICE 2
ICE 1
Clockspring (S227)
C2R115C-5
GN,0.5,100
C2LS41D-1
C2R115C-2
RD-WH,0.5,53
SJ11
RD-WH,0.5,47
C2LS41D-6
Cruise controls-
Remote (Y161)
C2LS41C-1
PK,0.35,233
C2LS41B-3
C2LS41C-2
BK,0.35,35
SJ2
BK,0.35,198
C2LS41B-1
Switch-Remote-ICE (S318)
Volume - (Y278)
Volume + (Y277)
Seek-
Up (Y279)
Seek-
Down (Y280)
Phone-
Send (Y281)
Phone-
End (Y282)
Mode (Y283)

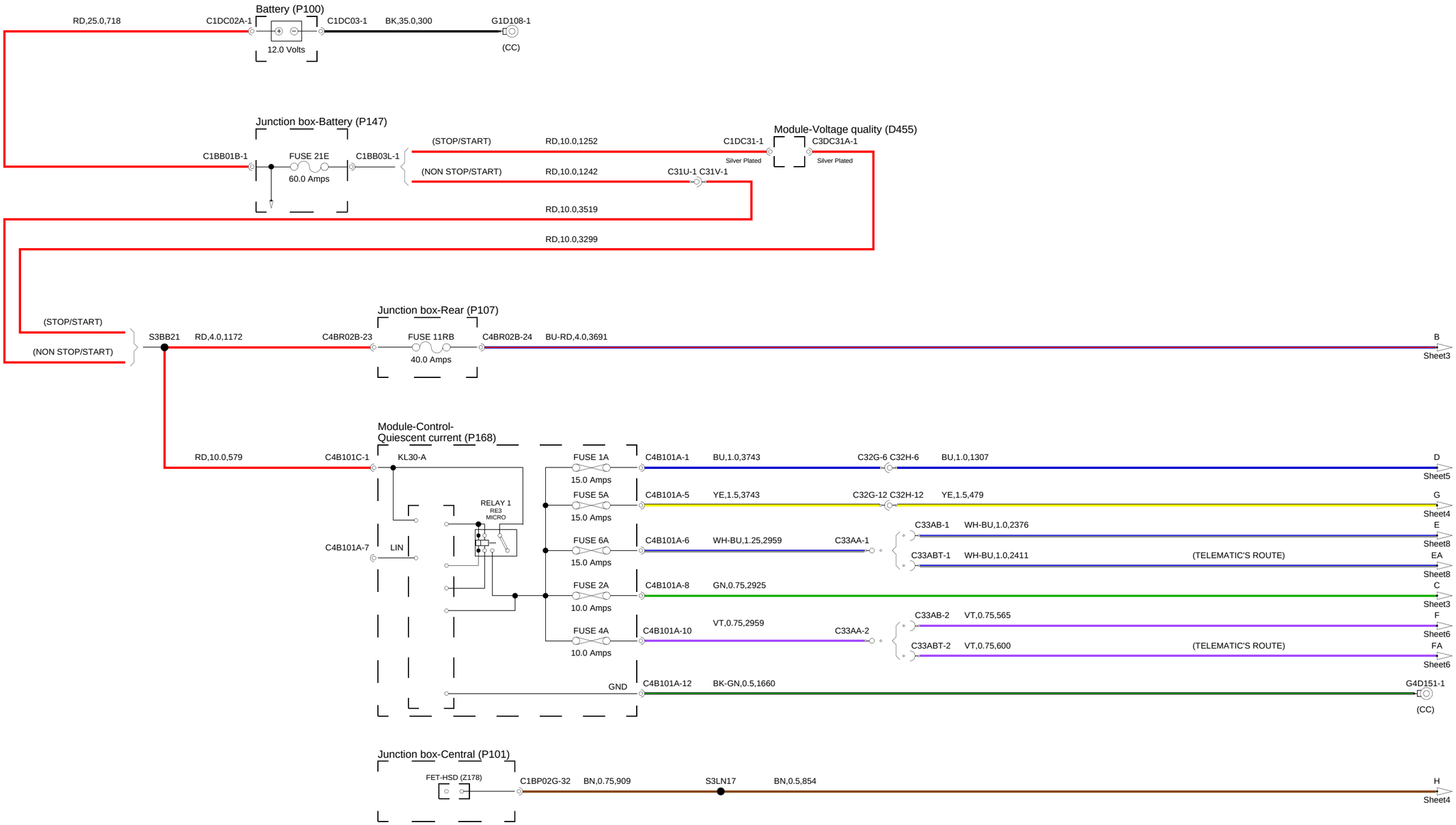
Battery (P100)
RD,25.0,718
C1DC02A-1
C1DC03-1
BK,35.0,300
G1D108-1
12.0 Volts
(CC)
Junction box-Battery (P147)
C1BB01B-1
FUSE 21E
60.0 Amps
C1BB03L-1
(STOP/START)
RD,10.0,1252
C1DC31-1
Silver Plated
Module-Voltage quality (D455)
C3DC31A-1
Silver Plated
(NON STOP/START)
RD,10.0,1242
C31U-1 C31V-1
RD,10.0,3519
RD,10.0,3299
Junction box-Rear (P107)
(STOP/START)
(NON STOP/START)
S3BB21
RD,4.0,1172
C4BR02B-23
FUSE 11RB
40.0 Amps
C4BR02B-24
BU-RD,4.0,3691
B
Sheet3
Module-Control-
Quiescent current (P168)
RD,10.0,579
C4B101C-1
KL30-A
RELAY 1
RE3
MICRO
C4B101A-7
LIN
FUSE 1A
15.0 Amps
C4B101A-1
BU,1.0,3743
C32G-6 C32H-6
BU,1.0,1307
D
Sheet5
FUSE 5A
15.0 Amps
C4B101A-5
YE,1.5,3743
C32G-12 C32H-12
YE,1.5,479
G
Sheet4
FUSE 6A
15.0 Amps
C4B101A-6
WH-BU,1.25,2959
C33AA-1
C33AB-1
WH-BU,1.0,2376
E
Sheet8
C33ABT-1
WH-BU,1.0,2411
(TELEMATIC'S ROUTE)
EA
Sheet8
FUSE 2A
10.0 Amps
C4B101A-8
GN,0.75,2925
C
Sheet3
FUSE 4A
10.0 Amps
C4B101A-10
VT,0.75,2959
C33AA-2
C33AB-2
VT,0.75,565
F
Sheet6
C33ABT-2
VT,0.75,600
(TELEMATIC'S ROUTE)
FA
Sheet6
GND
C4B101A-12
BK-GN,0.5,1660
G4D151-1
(CC)
Junction box-Central (P101)
FET-HSD (Z178)
C1BP02G-32
BN,0.75,909
S3LN17
BN,0.5,854
H
Sheet4

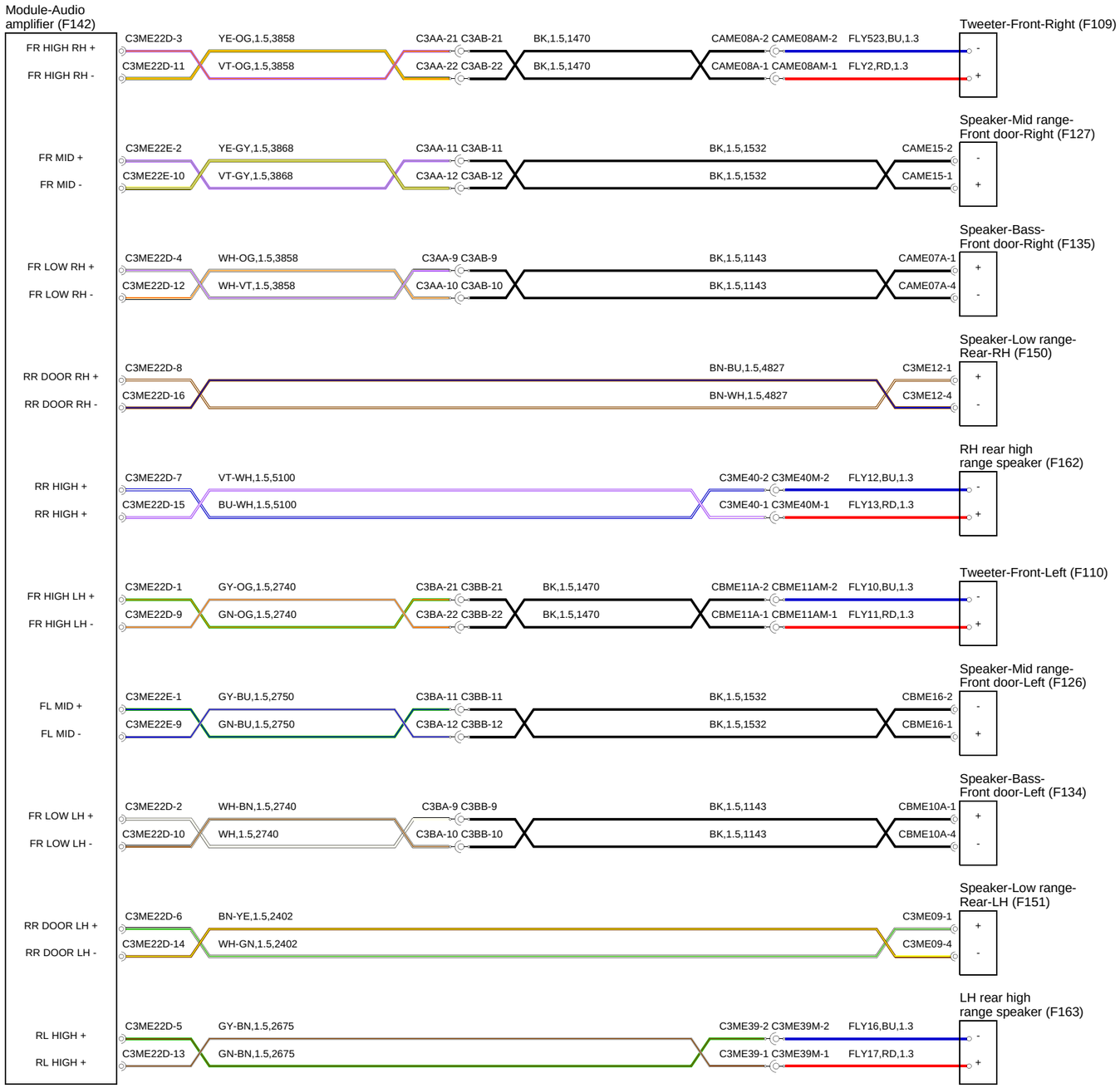
Module-Audio amplifier (F142)
FR HIGH RH +
FR HIGH RH -
C3ME22D-3
C3ME22D-11
YE-OG,1.5,3858
VT-OG,1.5,3858
C3AA-21 C3AB-21
C3AA-22 C3AB-22
BK,1.5,1470
BK,1.5,1470
CAME08A-2 CAME08AM-2
CAME08A-1 CAME08AM-1
FLY523,BU,1.3
FLY2,RD,1.3
Tweeter-Front-Right (F109)
FR MID +
FR MID -
C3ME22E-2
C3ME22E-10
YE-GY,1.5,3868
VT-GY,1.5,3868
C3AA-11 C3AB-11
C3AA-12 C3AB-12
BK,1.5,1532
BK,1.5,1532
CAME15-2
CAME15-1
Speaker-Mid range-Front door-Right (F127)
FR LOW RH +
FR LOW RH -
C3ME22D-4
C3ME22D-12
WH-OG,1.5,3858
WH-VT,1.5,3858
C3AA-9 C3AB-9
C3AA-10 C3AB-10
BK,1.5,1143
BK,1.5,1143
CAME07A-1
CAME07A-4
Speaker-Bass-Front door-Right (F135)
RR DOOR RH +
RR DOOR RH -
C3ME22D-8
C3ME22D-16
BN-BU,1.5,4827
BN-WH,1.5,4827
C3ME12-1
C3ME12-4
Speaker-Low range-Rear-RH (F150)
RR HIGH +
RR HIGH +
C3ME22D-7
C3ME22D-15
VT-WH,1.5,5100
BU-WH,1.5,5100
C3ME40-2 C3ME40M-2
C3ME40-1 C3ME40M-1
FLY12,BU,1.3
FLY13,RD,1.3
RH rear high range speaker (F162)
FR HIGH LH +
FR HIGH LH -
C3ME22D-1
C3ME22D-9
GY-OG,1.5,2740
GN-OG,1.5,2740
C3BA-21 C3BB-21
C3BA-22 C3BB-22
BK,1.5,1470
BK,1.5,1470
CBME11A-2 CBME11AM-2
CBME11A-1 CBME11AM-1
FLY10,BU,1.3
FLY11,RD,1.3
Tweeter-Front-Left (F110)
FL MID +
FL MID -
C3ME22E-1
C3ME22E-9
GY-BU,1.5,2750
GN-BU,1.5,2750
C3BA-11 C3BB-11
C3BA-12 C3BB-12
BK,1.5,1532
BK,1.5,1532
CBME16-2
CBME16-1
Speaker-Mid range-Front door-Left (F126)
FR LOW LH +
FR LOW LH -
C3ME22D-2
C3ME22D-10
WH-BN,1.5,2740
WH,1.5,2740
C3BA-9 C3BB-9
C3BA-10 C3BB-10
BK,1.5,1143
BK,1.5,1143
CBME10A-1
CBME10A-4
Speaker-Bass-Front door-Left (F134)
RR DOOR LH +
RR DOOR LH -
C3ME22D-6
C3ME22D-14
BN-YE,1.5,2402
WH-GN,1.5,2402
C3ME09-1
C3ME09-4
Speaker-Low range-Rear-LH (F151)
RL HIGH +
RL HIGH +
C3ME22D-5
C3ME22D-13
GY-BN,1.5,2675
GN-BN,1.5,2675
C3ME39-2 C3ME39M-2
C3ME39-1 C3ME39M-1
FLY16,BU,1.3
FLY17,RD,1.3
LH rear high range speaker (F163)

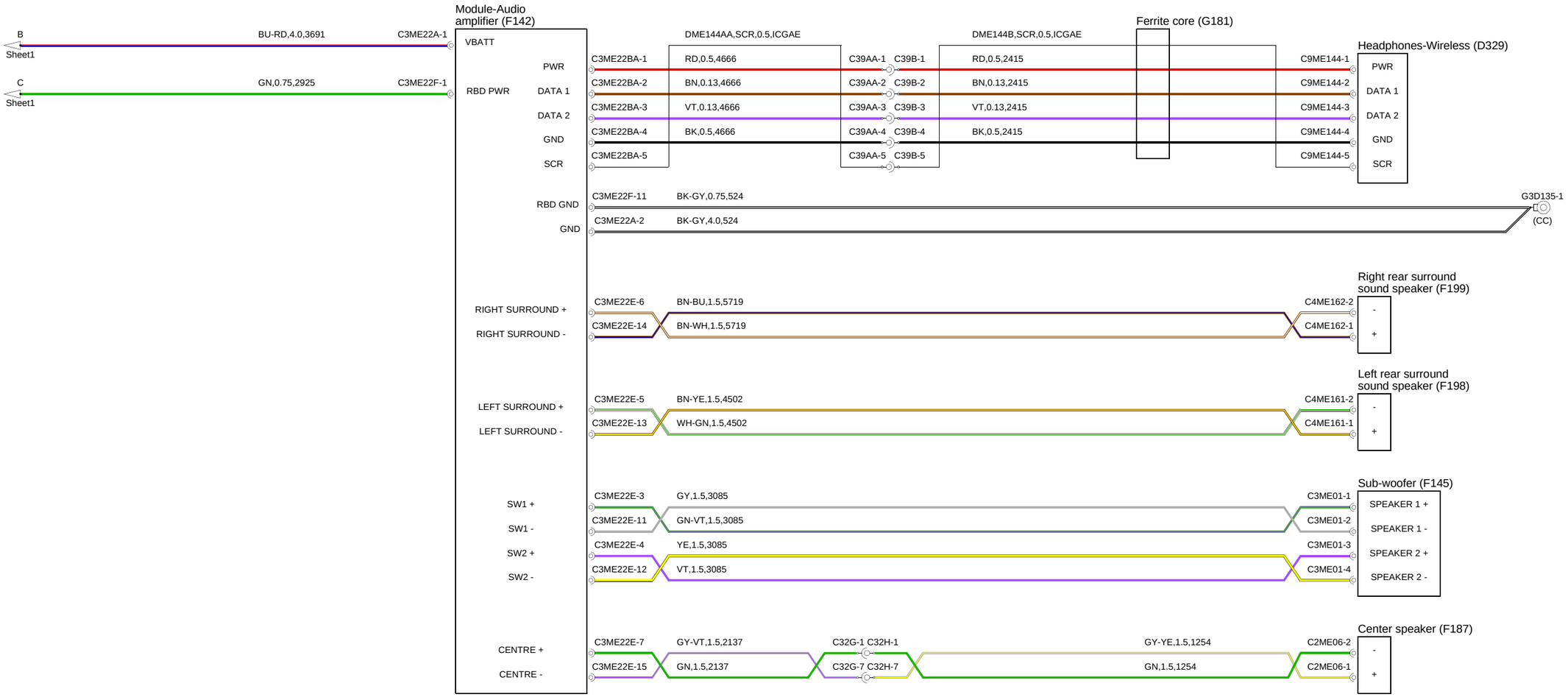
Module-Audio amplifier (F142)
B
Sheet1
BU-RD,4.0,3691
C3ME22A-1
C
Sheet1
GN,0.75,2925
C3ME22F-1
VBATT
RBD PWR
PWR
DATA 1
DATA 2
GND
SCR
RBD GND
GND
RIGHT SURROUND +
RIGHT SURROUND -
LEFT SURROUND +
LEFT SURROUND -
SW1 +
SW1 -
SW2 +
SW2 -
CENTRE +
CENTRE -
DME144AA,SCR,0.5,ICGAE
DME144B,SCR,0.5,ICGAE
Ferrite core (G181)
Headphones-Wireless (D329)
C3ME22BA-1
RD,0.5,4666
C39AA-1 C39B-1
RD,0.5,2415
C9ME144-1
C3ME22BA-2
BN,0.13,4666
C39AA-2 C39B-2
BN,0.13,2415
C9ME144-2
C3ME22BA-3
VT,0.13,4666
C39AA-3 C39B-3
VT,0.13,2415
C9ME144-3
C3ME22BA-4
BK,0.5,4666
C39AA-4 C39B-4
BK,0.5,2415
C9ME144-4
C3ME22BA-5
C39AA-5 C39B-5
C9ME144-5
C3ME22F-11
BK-GY,0.75,524
G3D135-1
(CC)
C3ME22A-2
BK-GY,4.0,524
Right rear surround sound speaker (F199)
C3ME22E-6
BN-BU,1.5,5719
C4ME162-2
C3ME22E-14
BN-WH,1.5,5719
C4ME162-1
Left rear surround sound speaker (F198)
C3ME22E-5
BN-YE,1.5,4502
C4ME161-2
C3ME22E-13
WH-GN,1.5,4502
C4ME161-1
Sub-woofer (F145)
C3ME22E-3
GY,1.5,3085
C3ME01-1
SPEAKER 1 +
C3ME22E-11
GN-VT,1.5,3085
C3ME01-2
SPEAKER 1 -
C3ME22E-4
YE,1.5,3085
C3ME01-3
SPEAKER 2 +
C3ME22E-12
VT,1.5,3085
C3ME01-4
SPEAKER 2 -
Center speaker (F187)
C3ME22E-7
GY-VT,1.5,2137
C32G-1 C32H-1
GY-YE,1.5,1254
C2ME06-2
C3ME22E-15
GN,1.5,2137
C32G-7 C32H-7
GN,1.5,1254
C2ME06-1

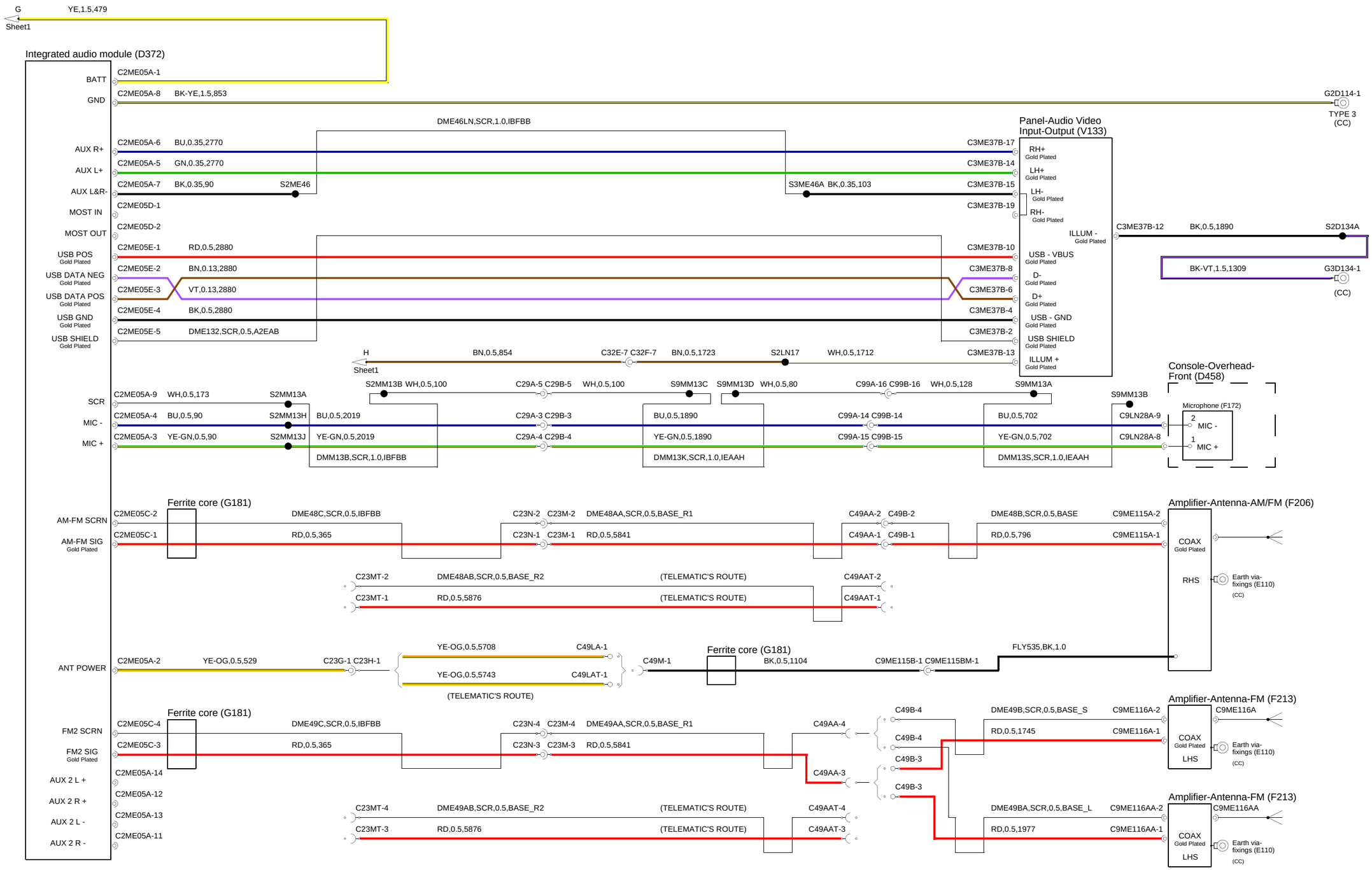
G
YE,1.5,479
Sheet1
Integrated audio module (D372)
BATT
C2ME05A-1
GND
C2ME05A-8
BK-YE,1.5,853
G2D114-1
TYPE 3
(CC)
DME46LN,SCR,1.0,IBFBB
Panel-Audio Video
Input-Output (V133)
AUX R+
C2ME05A-6
BU,0.35,2770
C3ME37B-17
RH+
Gold Plated
AUX L+
C2ME05A-5
GN,0.35,2770
C3ME37B-14
LH+
Gold Plated
AUX L&R-
C2ME05A-7
BK,0.35,90
S2ME46
S3ME46A
BK,0.35,103
C3ME37B-15
LH-
Gold Plated
MOST IN
C2ME05D-1
C3ME37B-19
RH-
Gold Plated
MOST OUT
C2ME05D-2
ILLUM -
Gold Plated
C3ME37B-12
BK,0.5,1890
S2D134A
USB POS
Gold Plated
C2ME05E-1
RD,0.5,2880
C3ME37B-10
USB - VBUS
Gold Plated
USB DATA NEG
Gold Plated
C2ME05E-2
BN,0.13,2880
C3ME37B-8
D-
Gold Plated
BK-VT,1.5,1309
G3D134-1
(CC)
USB DATA POS
Gold Plated
C2ME05E-3
VT,0.13,2880
C3ME37B-6
D+
Gold Plated
USB GND
Gold Plated
C2ME05E-4
BK,0.5,2880
C3ME37B-4
USB - GND
Gold Plated
USB SHIELD
Gold Plated
C2ME05E-5
DME132,SCR,0.5,A2EAB
C3ME37B-2
USB SHIELD
Gold Plated
H
BN,0.5,854
C32E-7 C32F-7
BN,0.5,1723
S2LN17
WH,0.5,1712
C3ME37B-13
ILLUM +
Gold Plated
Sheet1
Console-Overhead-
Front (D458)
S2MM13B WH,0.5,100
C29A-5 C29B-5
WH,0.5,100
S9MM13C
S9MM13D
WH,0.5,80
C99A-16 C99B-16
WH,0.5,128
S9MM13A
S9MM13B
SCR
C2ME05A-9
WH,0.5,173
S2MM13A
Microphone (F172)
MIC -
C2ME05A-4
BU,0.5,90
S2MM13H
BU,0.5,2019
C29A-3 C29B-3
BU,0.5,1890
C99A-14 C99B-14
BU,0.5,702
C9LN28A-9
2
MIC -
MIC +
C2ME05A-3
YE-GN,0.5,90
S2MM13J
YE-GN,0.5,2019
C29A-4 C29B-4
YE-GN,0.5,1890
C99A-15 C99B-15
YE-GN,0.5,702
C9LN28A-8
1
MIC +
DMM13B,SCR,1.0,IBFBB
DMM13K,SCR,1.0,IEAAH
DMM13S,SCR,1.0,IEAAH
Ferrite core (G181)
Amplifier-Antenna-AM/FM (F206)
AM-FM SCRN
C2ME05C-2
DME48C,SCR,0.5,IBFBB
C23N-2 C23M-2
DME48AA,SCR,0.5,BASE_R1
C49AA-2 C49B-2
DME48B,SCR,0.5,BASE
C9ME115A-2
AM-FM SIG
Gold Plated
C2ME05C-1
RD,0.5,365
C23N-1 C23M-1
RD,0.5,5841
C49AA-1 C49B-1
RD,0.5,796
C9ME115A-1
COAX
Gold Plated
RHS
Earth via-
fixings (E110)
(CC)
C23MT-2
DME48AB,SCR,0.5,BASE_R2
(TELEMATIC'S ROUTE)
C49AAT-2
C23MT-1
RD,0.5,5876
(TELEMATIC'S ROUTE)
C49AAT-1
ANT POWER
C2ME05A-2
YE-OG,0.5,529
C23G-1 C23H-1
YE-OG,0.5,5708
C49LA-1
YE-OG,0.5,5743
C49LAT-1
(TELEMATIC'S ROUTE)
C49M-1
Ferrite core (G181)
BK,0.5,1104
C9ME115B-1 C9ME115BM-1
FLY535,BK,1.0
Amplifier-Antenna-FM (F213)
FM2 SCRN
C2ME05C-4
Ferrite core (G181)
DME49C,SCR,0.5,IBFBB
C23N-4 C23M-4
DME49AA,SCR,0.5,BASE_R1
C49AA-4
C49B-4
DME49B,SCR,0.5,BASE_S
C9ME116A-2
C9ME116A
FM2 SIG
Gold Plated
C2ME05C-3
RD,0.5,365
C23N-3 C23M-3
RD,0.5,5841
C49B-4
RD,0.5,1745
C9ME116A-1
C49B-3
C49AA-3
C49B-3
AUX 2 L +
C2ME05A-14
AUX 2 R +
C2ME05A-12
AUX 2 L -
C2ME05A-13
AUX 2 R -
C2ME05A-11
C23MT-4
DME49AB,SCR,0.5,BASE_R2
(TELEMATIC'S ROUTE)
C49AAT-4
DME49BA,SCR,0.5,BASE_L
C9ME116AA-2
C9ME116AA
C23MT-3
RD,0.5,5876
(TELEMATIC'S ROUTE)
C49AAT-3
RD,0.5,1977
C9ME116AA-1
COAX
Gold Plated
LHS
Earth via-
fixings (E110)
(CC)

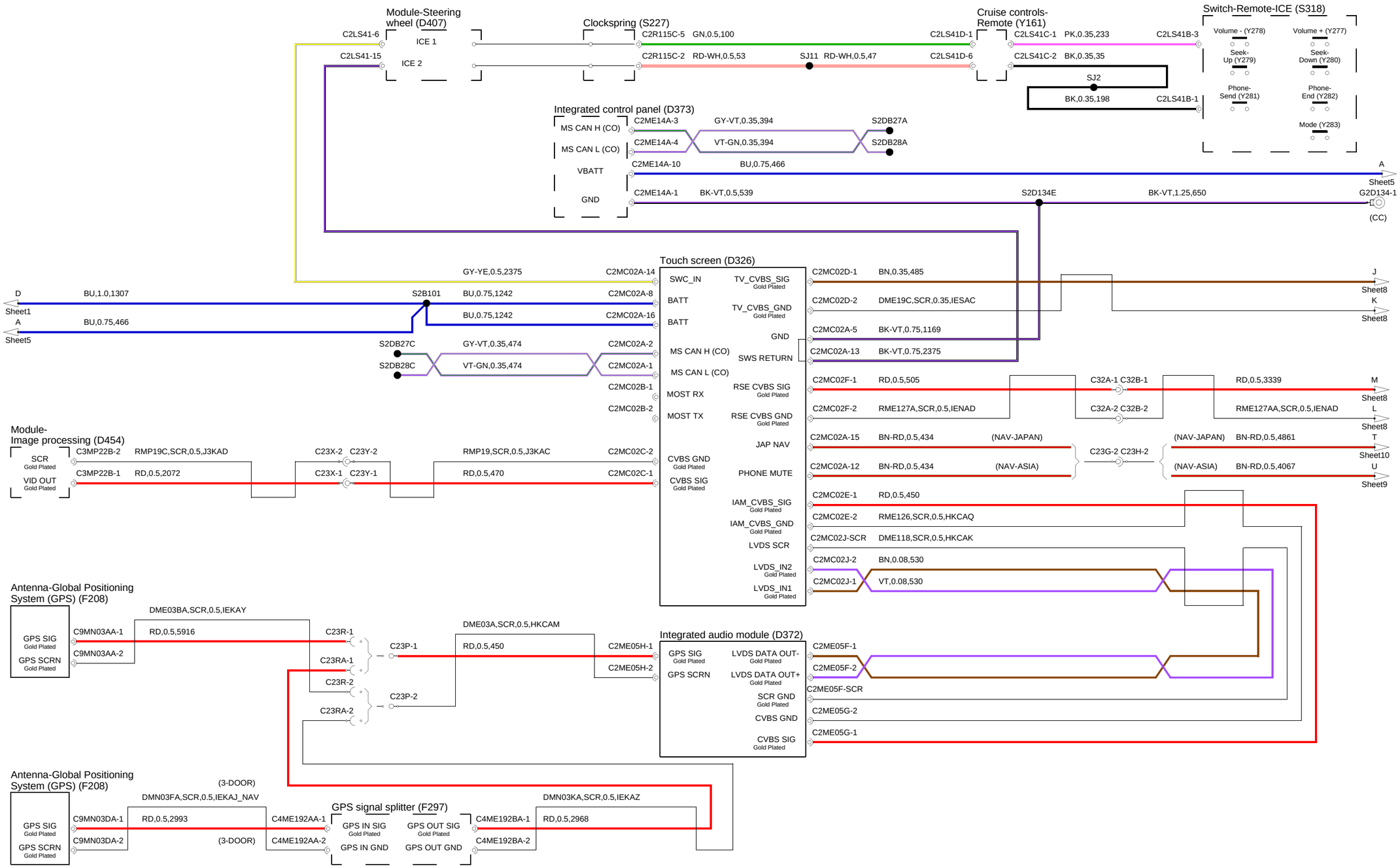
Module-Steering wheel (D407)
C2LS41-6
ICE 1
C2LS41-15
ICE 2
Clockspring (S227)
C2R115C-5 GN,0.5,100
C2R115C-2 RD-WH,0.5,53
SJ11 RD-WH,0.5,47
C2LS41D-1
C2LS41D-6
Cruise controls-Remote (Y161)
C2LS41C-1 PK,0.35,233
C2LS41C-2 BK,0.35,35
SJ2
BK,0.35,198
C2LS41B-3
C2LS41B-1
Switch-Remote-ICE (S318)
Volume - (Y278)
Volume + (Y277)
Seek-Up (Y279)
Seek-Down (Y280)
Phone-Send (Y281)
Phone-End (Y282)
Mode (Y283)
Integrated control panel (D373)
MS CAN H (CO)
MS CAN L (CO)
VBATT
GND
C2ME14A-3 GY-VT,0.35,394 S2DB27A
C2ME14A-4 VT-GN,0.35,394 S2DB28A
C2ME14A-10 BU,0.75,466
C2ME14A-1 BK-VT,0.5,539
S2D134E
BK-VT,1.25,650
A Sheet5
G2D134-1
(CC)
Touch screen (D326)
SWC_IN
BATT
BATT
MS CAN H (CO)
MS CAN L (CO)
MOST RX
MOST TX
CVBS GND
CVBS SIG
TV_CVBS_SIG
TV_CVBS_GND
GND
SWS RETURN
RSE CVBS SIG
RSE CVBS GND
JAP NAV
PHONE MUTE
IAM_CVBS_SIG
IAM_CVBS_GND
LVDS SCR
LVDS_IN2
LVDS_IN1
D Sheet1
A Sheet5
BU,1.0,1307
BU,0.75,466
S2B101
BU,0.75,1242
BU,0.75,1242
GY-YE,0.5,2375
C2MC02A-14
C2MC02A-8
C2MC02A-16
S2DB27C
S2DB28C
GY-VT,0.35,474
VT-GN,0.35,474
C2MC02A-2
C2MC02A-1
C2MC02B-1
C2MC02B-2
C2MC02D-1 BN,0.35,485
C2MC02D-2 DME19C,SCR,0.35,IESAC
C2MC02A-5 BK-VT,0.75,1169
C2MC02A-13 BK-VT,0.75,2375
C2MC02F-1 RD,0.5,505
C2MC02F-2 RME127A,SCR,0.5,IENAD
C2MC02A-15 BN-RD,0.5,434 (NAV-JAPAN)
C2MC02A-12 BN-RD,0.5,434 (NAV-ASIA)
C2MC02E-1 RD,0.5,450
C2MC02E-2 RME126,SCR,0.5,HKCAQ
C2MC02J-SCR DME118,SCR,0.5,HKCAK
C2MC02J-2 BN,0.08,530
C2MC02J-1 VT,0.08,530
J Sheet8
K Sheet8
C32A-1 C32B-1
C32A-2 C32B-2
RD,0.5,3339
RME127AA,SCR,0.5,IENAD
M Sheet8
L Sheet8
C23G-2 C23H-2
(NAV-JAPAN) BN-RD,0.5,4861
(NAV-ASIA) BN-RD,0.5,4067
T Sheet10
U Sheet9
Module-Image processing (D454)
SCR
VID OUT
C3MP22B-2 RMP19C,SCR,0.5,J3KAD
C3MP22B-1 RD,0.5,2072
C23X-2 C23Y-2
C23X-1 C23Y-1
RMP19,SCR,0.5,J3KAC
RD,0.5,470
C2MC02C-2
C2MC02C-1
Antenna-Global Positioning System (GPS) (F208)
GPS SIG
GPS SCRN
C9MN03AA-1 RD,0.5,5916
C9MN03AA-2
DME03BA,SCR,0.5,IEKAY
C23R-1
C23RA-1
C23R-2
C23RA-2
C23P-1
C23P-2
DME03A,SCR,0.5,HKCAM
RD,0.5,450
C2ME05H-1
C2ME05H-2
Integrated audio module (D372)
GPS SIG
GPS SCRN
LVDS DATA OUT-
LVDS DATA OUT+
SCR GND
CVBS GND
CVBS SIG
C2ME05F-1
C2ME05F-2
C2ME05F-SCR
C2ME05G-2
C2ME05G-1
Antenna-Global Positioning System (GPS) (F208)
GPS SIG
GPS SCRN
C9MN03DA-1 RD,0.5,2993 (3-DOOR)
C9MN03DA-2 (3-DOOR)
DMN03FA,SCR,0.5,IEKAJ_NAV
C4ME192AA-1
C4ME192AA-2
GPS signal splitter (F297)
GPS IN SIG
GPS IN GND
GPS OUT SIG
GPS OUT GND
C4ME192BA-1
C4ME192BA-2
RD,0.5,2968
DMN03KA,SCR,0.5,IEKAZ

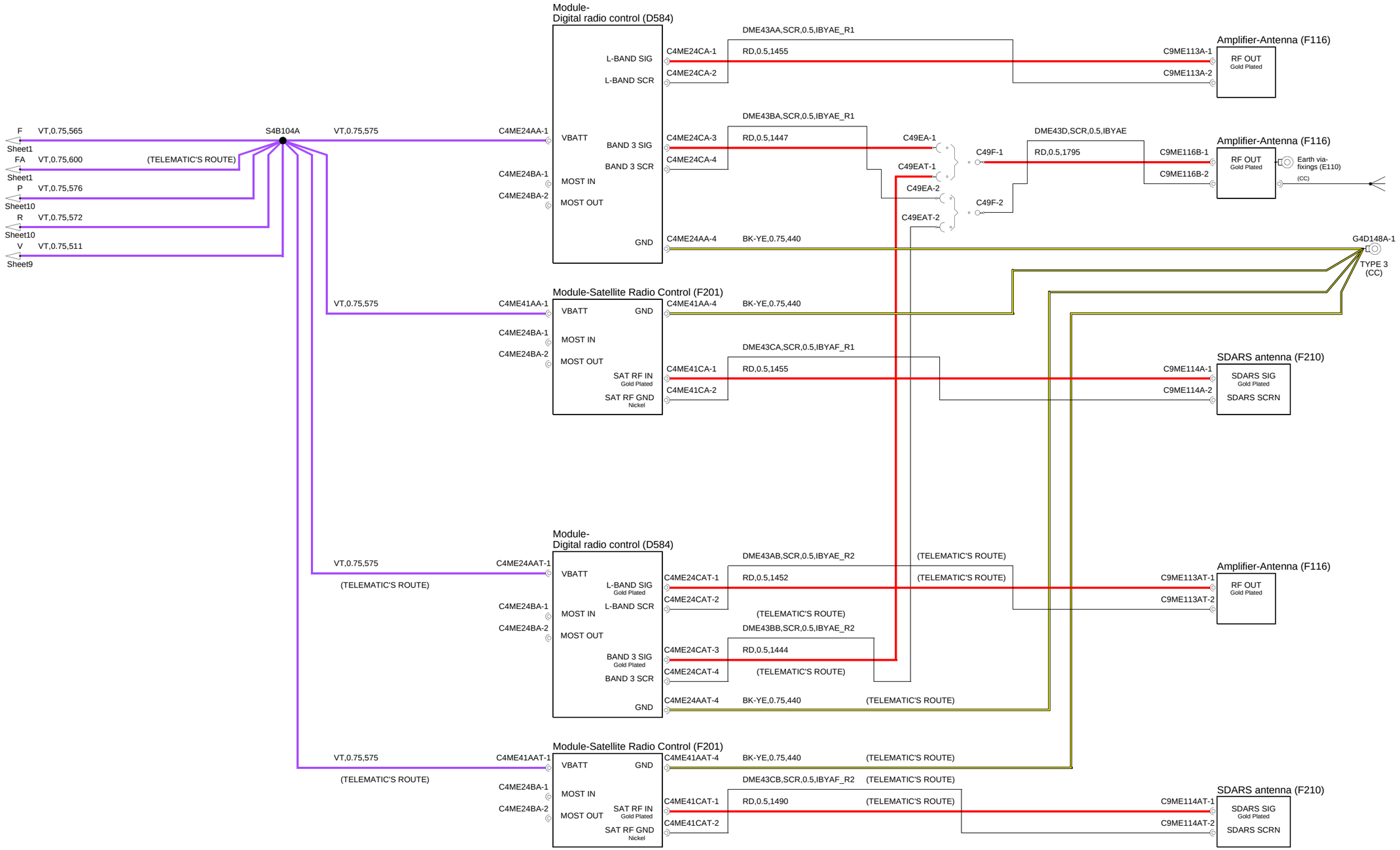
Module-
Digital radio control (D584)
L-BAND SIG
L-BAND SCR
VBATT
BAND 3 SIG
BAND 3 SCR
MOST IN
MOST OUT
GND
C4ME24CA-1
C4ME24CA-2
C4ME24CA-3
C4ME24CA-4
C4ME24AA-1
C4ME24BA-1
C4ME24BA-2
C4ME24AA-4
DME43AA,SCR,0.5,IBYAE_R1
RD,0.5,1455
DME43BA,SCR,0.5,IBYAE_R1
RD,0.5,1447
BK-YE,0.75,440
Amplifier-Antenna (F116)
RF OUT
Gold Plated
C9ME113A-1
C9ME113A-2
C49EA-1
C49EAT-1
C49EA-2
C49EAT-2
C49F-1
C49F-2
DME43D,SCR,0.5,IBYAE
RD,0.5,1795
C9ME116B-1
C9ME116B-2
Earth via-
fixings (E110)
(CC)
G4D148A-1
TYPE 3
(CC)
F VT,0.75,565 Sheet1
FA VT,0.75,600 Sheet1
P VT,0.75,576 Sheet10
R VT,0.75,572 Sheet10
V VT,0.75,511 Sheet9
S4B104A
VT,0.75,575
(TELEMATIC'S ROUTE)
Module-Satellite Radio Control (F201)
C4ME41AA-1
C4ME41AA-4
SAT RF IN
Gold Plated
SAT RF GND
Nickel
C4ME41CA-1
C4ME41CA-2
DME43CA,SCR,0.5,IBYAF_R1
RD,0.5,1455
SDARS antenna (F210)
SDARS SIG
Gold Plated
SDARS SCRN
C9ME114A-1
C9ME114A-2
Module-
Digital radio control (D584)
C4ME24AAT-1
C4ME24CAT-1
C4ME24CAT-2
C4ME24CAT-3
C4ME24CAT-4
C4ME24AAT-4
DME43AB,SCR,0.5,IBYAE_R2
RD,0.5,1452
DME43BB,SCR,0.5,IBYAE_R2
RD,0.5,1444
BK-YE,0.75,440
C9ME113AT-1
C9ME113AT-2
Module-Satellite Radio Control (F201)
C4ME41AAT-1
C4ME41AAT-4
C4ME41CAT-1
C4ME41CAT-2
DME43CB,SCR,0.5,IBYAF_R2
RD,0.5,1490
C9ME114AT-1
C9ME114AT-2

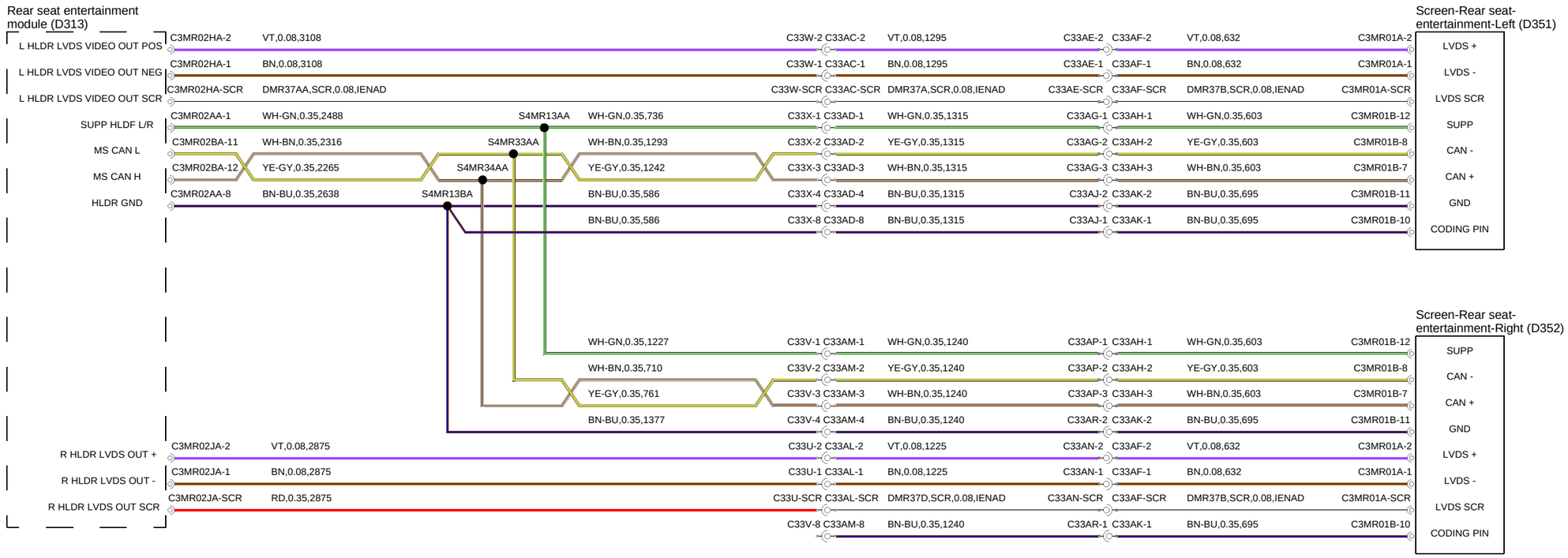
Rear seat entertainment module (D313)
L HLDR LVDS VIDEO OUT POS
L HLDR LVDS VIDEO OUT NEG
L HLDR LVDS VIDEO OUT SCR
SUPP HLDF L/R
MS CAN L
MS CAN H
HLDR GND
R HLDR LVDS OUT +
R HLDR LVDS OUT -
R HLDR LVDS OUT SCR
C3MR02HA-2 VT,0.08,3108 C33W-2 C33AC-2 VT,0.08,1295 C33AE-2 C33AF-2 VT,0.08,632 C3MR01A-2
C3MR02HA-1 BN,0.08,3108 C33W-1 C33AC-1 BN,0.08,1295 C33AE-1 C33AF-1 BN,0.08,632 C3MR01A-1
C3MR02HA-SCR DMR37AA,SCR,0.08,IENAD C33W-SCR C33AC-SCR DMR37A,SCR,0.08,IENAD C33AE-SCR C33AF-SCR DMR37B,SCR,0.08,IENAD C3MR01A-SCR
C3MR02AA-1 WH-GN,0.35,2488 S4MR13AA WH-GN,0.35,736 C33X-1 C33AD-1 WH-GN,0.35,1315 C33AG-1 C33AH-1 WH-GN,0.35,603 C3MR01B-12
C3MR02BA-11 WH-BN,0.35,2316 S4MR33AA WH-BN,0.35,1293 C33X-2 C33AD-2 YE-GY,0.35,1315 C33AG-2 C33AH-2 YE-GY,0.35,603 C3MR01B-8
C3MR02BA-12 YE-GY,0.35,2265 S4MR34AA YE-GY,0.35,1242 C33X-3 C33AD-3 WH-BN,0.35,1315 C33AG-3 C33AH-3 WH-BN,0.35,603 C3MR01B-7
C3MR02AA-8 BN-BU,0.35,2638 S4MR13BA BN-BU,0.35,586 C33X-4 C33AD-4 BN-BU,0.35,1315 C33AJ-2 C33AK-2 BN-BU,0.35,695 C3MR01B-11
BN-BU,0.35,586 C33X-8 C33AD-8 BN-BU,0.35,1315 C33AJ-1 C33AK-1 BN-BU,0.35,695 C3MR01B-10
Screen-Rear seat-entertainment-Left (D351)
LVDS +
LVDS -
LVDS SCR
SUPP
CAN -
CAN +
GND
CODING PIN
WH-GN,0.35,1227 C33V-1 C33AM-1 WH-GN,0.35,1240 C33AP-1 C33AH-1 WH-GN,0.35,603 C3MR01B-12
WH-BN,0.35,710 C33V-2 C33AM-2 YE-GY,0.35,1240 C33AP-2 C33AH-2 YE-GY,0.35,603 C3MR01B-8
YE-GY,0.35,761 C33V-3 C33AM-3 WH-BN,0.35,1240 C33AP-3 C33AH-3 WH-BN,0.35,603 C3MR01B-7
BN-BU,0.35,1377 C33V-4 C33AM-4 BN-BU,0.35,1240 C33AR-2 C33AK-2 BN-BU,0.35,695 C3MR01B-11
C3MR02JA-2 VT,0.08,2875 C33U-2 C33AL-2 VT,0.08,1225 C33AN-2 C33AF-2 VT,0.08,632 C3MR01A-2
C3MR02JA-1 BN,0.08,2875 C33U-1 C33AL-1 BN,0.08,1225 C33AN-1 C33AF-1 BN,0.08,632 C3MR01A-1
C3MR02JA-SCR RD,0.35,2875 C33U-SCR C33AL-SCR DMR37D,SCR,0.08,IENAD C33AN-SCR C33AF-SCR DMR37B,SCR,0.08,IENAD C3MR01A-SCR
C33V-8 C33AM-8 BN-BU,0.35,1240 C33AR-1 C33AK-1 BN-BU,0.35,695 C3MR01B-10
Screen-Rear seat-entertainment-Right (D352)
SUPP
CAN -
CAN +
GND
LVDS +
LVDS -
LVDS SCR
CODING PIN

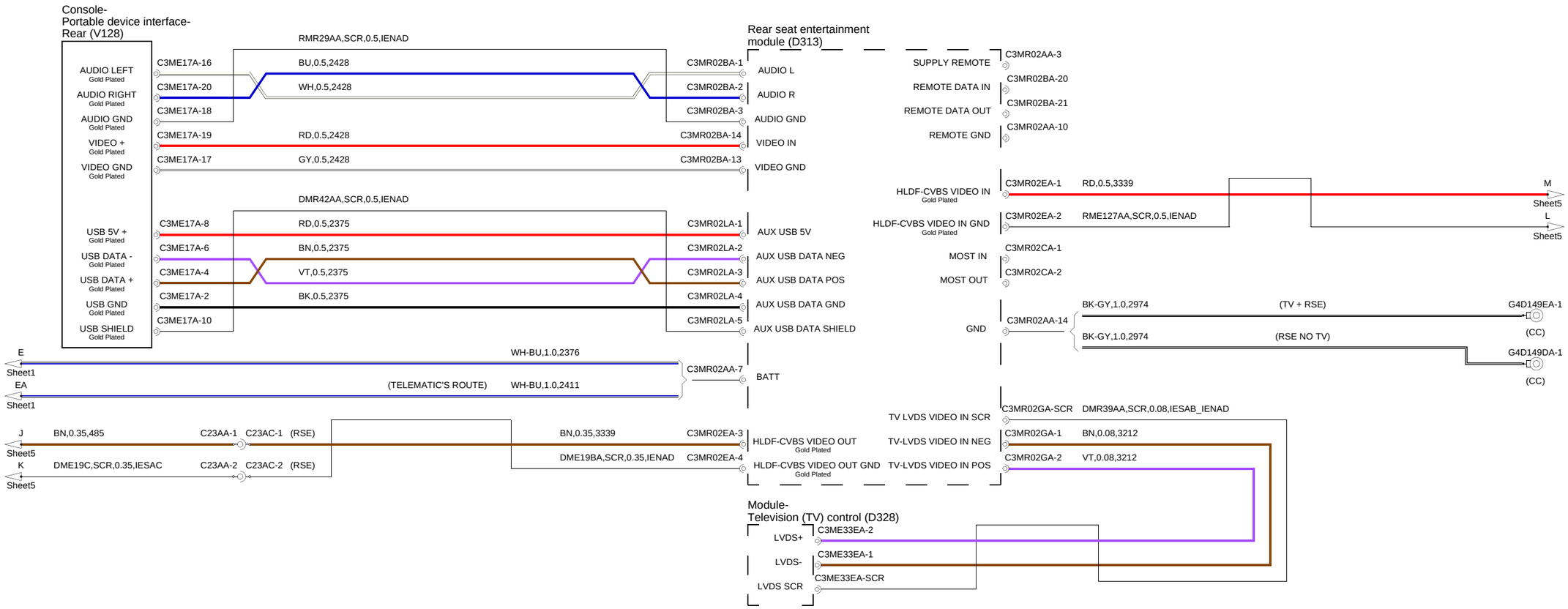
Console-
Portable device interface-
Rear (V128)
AUDIO LEFT
Gold Plated
AUDIO RIGHT
Gold Plated
AUDIO GND
Gold Plated
VIDEO +
Gold Plated
VIDEO GND
Gold Plated
USB 5V +
Gold Plated
USB DATA -
Gold Plated
USB DATA +
Gold Plated
USB GND
Gold Plated
USB SHIELD
Gold Plated
RMR29AA,SCR,0.5,IENAD
C3ME17A-16
BU,0.5,2428
C3MR02BA-1
C3ME17A-20
WH,0.5,2428
C3MR02BA-2
C3ME17A-18
C3MR02BA-3
C3ME17A-19
RD,0.5,2428
C3MR02BA-14
C3ME17A-17
GY,0.5,2428
C3MR02BA-13
DMR42AA,SCR,0.5,IENAD
C3ME17A-8
RD,0.5,2375
C3MR02LA-1
C3ME17A-6
BN,0.5,2375
C3MR02LA-2
C3ME17A-4
VT,0.5,2375
C3MR02LA-3
C3ME17A-2
BK,0.5,2375
C3MR02LA-4
C3ME17A-10
C3MR02LA-5
E
Sheet1
WH-BU,1.0,2376
C3MR02AA-7
EA
Sheet1
(TELEMATIC'S ROUTE)
WH-BU,1.0,2411
J
Sheet5
BN,0.35,485
C23AA-1
C23AC-1
(RSE)
K
Sheet5
DME19C,SCR,0.35,IESAC
C23AA-2
C23AC-2
(RSE)
BN,0.35,3339
C3MR02EA-3
DME19BA,SCR,0.35,IENAD
C3MR02EA-4
Rear seat entertainment
module (D313)
AUDIO L
AUDIO R
AUDIO GND
VIDEO IN
VIDEO GND
AUX USB 5V
AUX USB DATA NEG
AUX USB DATA POS
AUX USB DATA GND
AUX USB DATA SHIELD
BATT
HLDF-CVBS VIDEO OUT
Gold Plated
HLDF-CVBS VIDEO OUT GND
Gold Plated
SUPPLY REMOTE
C3MR02AA-3
REMOTE DATA IN
C3MR02BA-20
REMOTE DATA OUT
C3MR02BA-21
REMOTE GND
C3MR02AA-10
HLDF-CVBS VIDEO IN
Gold Plated
C3MR02EA-1
RD,0.5,3339
M
Sheet5
HLDF-CVBS VIDEO IN GND
Gold Plated
C3MR02EA-2
RME127AA,SCR,0.5,IENAD
L
Sheet5
MOST IN
C3MR02CA-1
MOST OUT
C3MR02CA-2
GND
C3MR02AA-14
BK-GY,1.0,2974
(TV + RSE)
G4D149EA-1
(CC)
BK-GY,1.0,2974
(RSE NO TV)
G4D149DA-1
(CC)
TV LVDS VIDEO IN SCR
C3MR02GA-SCR
DMR39AA,SCR,0.08,IESAB_IENAD
TV-LVDS VIDEO IN NEG
C3MR02GA-1
BN,0.08,3212
TV-LVDS VIDEO IN POS
C3MR02GA-2
VT,0.08,3212
Module-
Television (TV) control (D328)
LVDS+
C3ME33EA-2
LVDS-
C3ME33EA-1
LVDS SCR
C3ME33EA-SCR

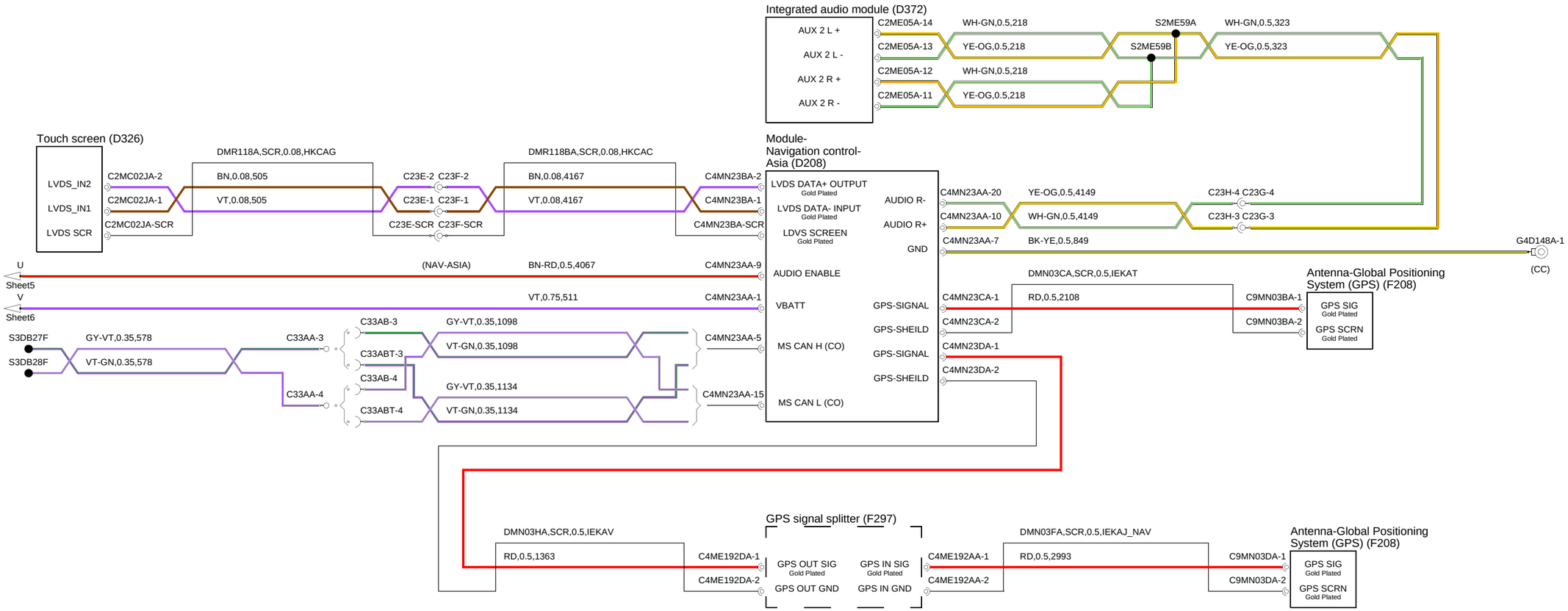
Integrated audio module (D372)
AUX 2 L +
AUX 2 L -
AUX 2 R +
AUX 2 R -
C2ME05A-14
C2ME05A-13
C2ME05A-12
C2ME05A-11
WH-GN,0.5,218
YE-OG,0.5,218
WH-GN,0.5,218
YE-OG,0.5,218
S2ME59A
S2ME59B
WH-GN,0.5,323
YE-OG,0.5,323
Touch screen (D326)
LVDS_IN2
LVDS_IN1
LVDS SCR
C2MC02JA-2
C2MC02JA-1
C2MC02JA-SCR
DMR118A,SCR,0.08,HKCAG
BN,0.08,505
VT,0.08,505
C23E-2 C23F-2
C23E-1 C23F-1
C23E-SCR C23F-SCR
DMR118BA,SCR,0.08,HKCAC
BN,0.08,4167
VT,0.08,4167
C4MN23BA-2
C4MN23BA-1
C4MN23BA-SCR
Module-
Navigation control-
Asia (D208)
LVDS DATA+ OUTPUT
Gold Plated
LVDS DATA- INPUT
Gold Plated
LDVS SCREEN
Gold Plated
AUDIO ENABLE
VBATT
MS CAN H (CO)
MS CAN L (CO)
AUDIO R-
AUDIO R+
GND
GPS-SIGNAL
GPS-SHEILD
GPS-SIGNAL
GPS-SHEILD
C4MN23AA-20
C4MN23AA-10
C4MN23AA-7
YE-OG,0.5,4149
WH-GN,0.5,4149
BK-YE,0.5,849
C23H-4 C23G-4
C23H-3 C23G-3
G4D148A-1
(CC)
U
Sheet5
(NAV-ASIA)
BN-RD,0.5,4067
C4MN23AA-9
V
Sheet6
VT,0.75,511
C4MN23AA-1
DMN03CA,SCR,0.5,IEKAT
RD,0.5,2108
C4MN23CA-1
C4MN23CA-2
C9MN03BA-1
C9MN03BA-2
Antenna-Global Positioning
System (GPS) (F208)
GPS SIG
Gold Plated
GPS SCRN
Gold Plated
S3DB27F
S3DB28F
GY-VT,0.35,578
VT-GN,0.35,578
C33AA-3
C33AA-4
C33AB-3
C33ABT-3
C33AB-4
C33ABT-4
GY-VT,0.35,1098
VT-GN,0.35,1098
GY-VT,0.35,1134
VT-GN,0.35,1134
C4MN23AA-5
C4MN23AA-15
C4MN23DA-1
C4MN23DA-2
GPS signal splitter (F297)
DMN03HA,SCR,0.5,IEKAV
RD,0.5,1363
C4ME192DA-1
C4ME192DA-2
GPS OUT SIG
Gold Plated
GPS OUT GND
GPS IN SIG
Gold Plated
GPS IN GND
C4ME192AA-1
C4ME192AA-2
DMN03FA,SCR,0.5,IEKAJ_NAV
RD,0.5,2993
C9MN03DA-1
C9MN03DA-2
Antenna-Global Positioning
System (GPS) (F208)
GPS SIG
Gold Plated
GPS SCRN
Gold Plated

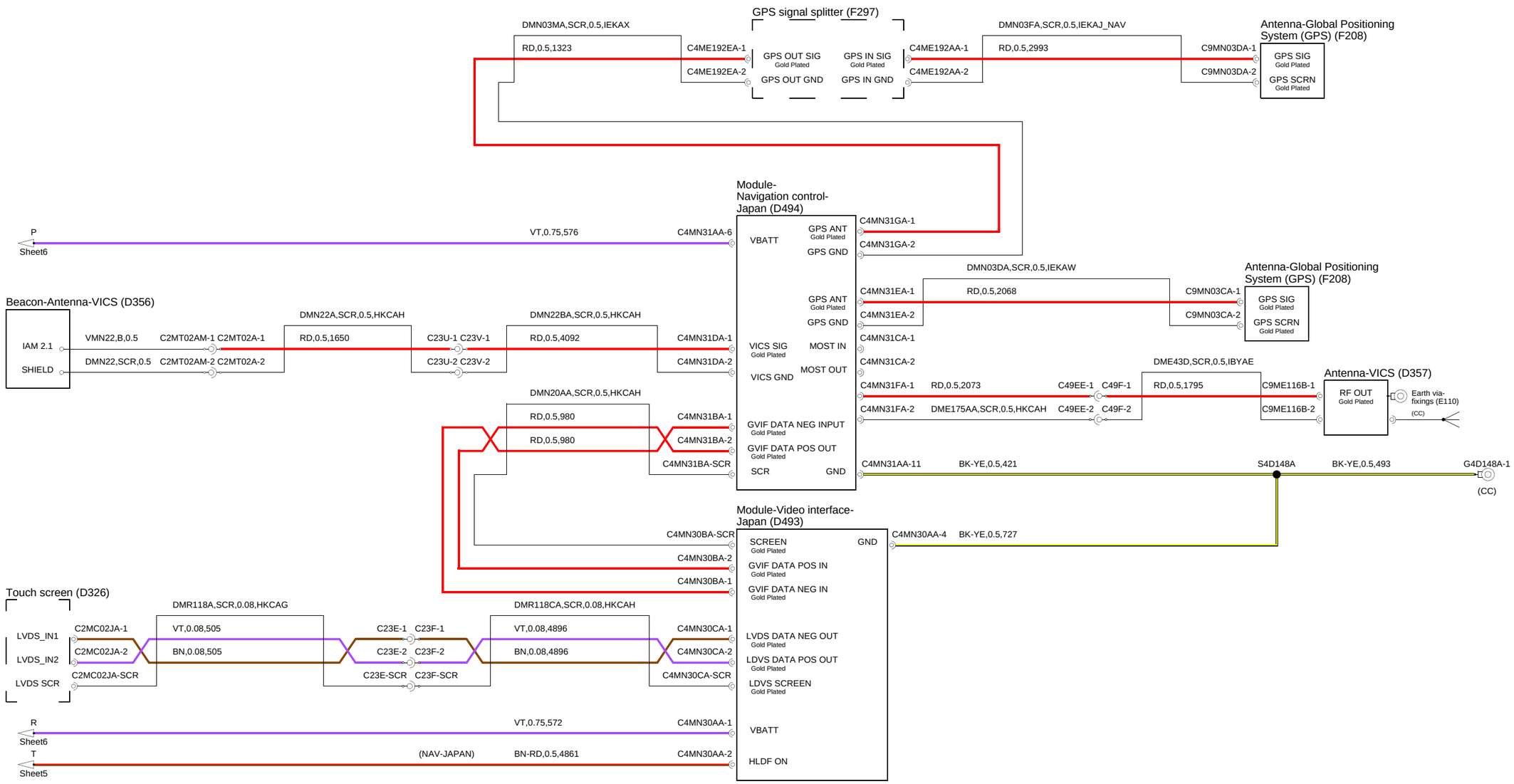
GPS signal splitter (F297)
DMN03MA,SCR,0.5,IEKAX
RD,0.5,1323
C4ME192EA-1
C4ME192EA-2
GPS OUT SIG
Gold Plated
GPS OUT GND
GPS IN SIG
Gold Plated
GPS IN GND
C4ME192AA-1
C4ME192AA-2
DMN03FA,SCR,0.5,IEKAJ_NAV
RD,0.5,2993
C9MN03DA-1
C9MN03DA-2
Antenna-Global Positioning System (GPS) (F208)
GPS SIG
Gold Plated
GPS SCRN
Gold Plated
Module-Navigation control-Japan (D494)
P
Sheet6
VT,0.75,576
C4MN31AA-6
VBATT
GPS ANT
Gold Plated
GPS GND
C4MN31GA-1
C4MN31GA-2
DMN03DA,SCR,0.5,IEKAW
RD,0.5,2068
C4MN31EA-1
C4MN31EA-2
C9MN03CA-1
C9MN03CA-2
Antenna-Global Positioning System (GPS) (F208)
GPS SIG
Gold Plated
GPS SCRN
Gold Plated
Beacon-Antenna-VICS (D356)
IAM 2.1
SHIELD
VMN22,B,0.5
DMN22,SCR,0.5
C2MT02AM-1 C2MT02A-1
C2MT02AM-2 C2MT02A-2
DMN22A,SCR,0.5,HKCAH
RD,0.5,1650
C23U-1 C23V-1
C23U-2 C23V-2
DMN22BA,SCR,0.5,HKCAH
RD,0.5,4092
C4MN31DA-1
C4MN31DA-2
VICS SIG
Gold Plated
VICS GND
MOST IN
MOST OUT
C4MN31CA-1
C4MN31CA-2
C4MN31FA-1
C4MN31FA-2
RD,0.5,2073
DME175AA,SCR,0.5,HKCAH
C49EE-1 C49F-1
C49EE-2 C49F-2
DME43D,SCR,0.5,IBYAE
RD,0.5,1795
C9ME116B-1
C9ME116B-2
Antenna-VICS (D357)
RF OUT
Gold Plated
Earth via-fixings (E110)
(CC)
DMN20AA,SCR,0.5,HKCAH
RD,0.5,980
RD,0.5,980
C4MN31BA-1
C4MN31BA-2
C4MN31BA-SCR
GVIF DATA NEG INPUT
Gold Plated
GVIF DATA POS OUT
Gold Plated
SCR
GND
C4MN31AA-11
BK-YE,0.5,421
S4D148A
BK-YE,0.5,493
G4D148A-1
(CC)
Module-Video interface-Japan (D493)
C4MN30BA-SCR
C4MN30BA-2
C4MN30BA-1
SCREEN
Gold Plated
GVIF DATA POS IN
Gold Plated
GVIF DATA NEG IN
Gold Plated
GND
C4MN30AA-4
BK-YE,0.5,727
Touch screen (D326)
LVDS_IN1
LVDS_IN2
LVDS SCR
C2MC02JA-1
C2MC02JA-2
C2MC02JA-SCR
DMR118A,SCR,0.08,HKCAG
VT,0.08,505
BN,0.08,505
C23E-1 C23F-1
C23E-2 C23F-2
C23E-SCR C23F-SCR
DMR118CA,SCR,0.08,HKCAH
VT,0.08,4896
BN,0.08,4896
C4MN30CA-1
C4MN30CA-2
C4MN30CA-SCR
LVDS DATA NEG OUT
Gold Plated
LDVS DATA POS OUT
Gold Plated
LDVS SCREEN
Gold Plated
R
Sheet6
VT,0.75,572
C4MN30AA-1
VBATT
T
Sheet5
(NAV-JAPAN)
BN-RD,0.5,4861
C4MN30AA-2
HLDF ON

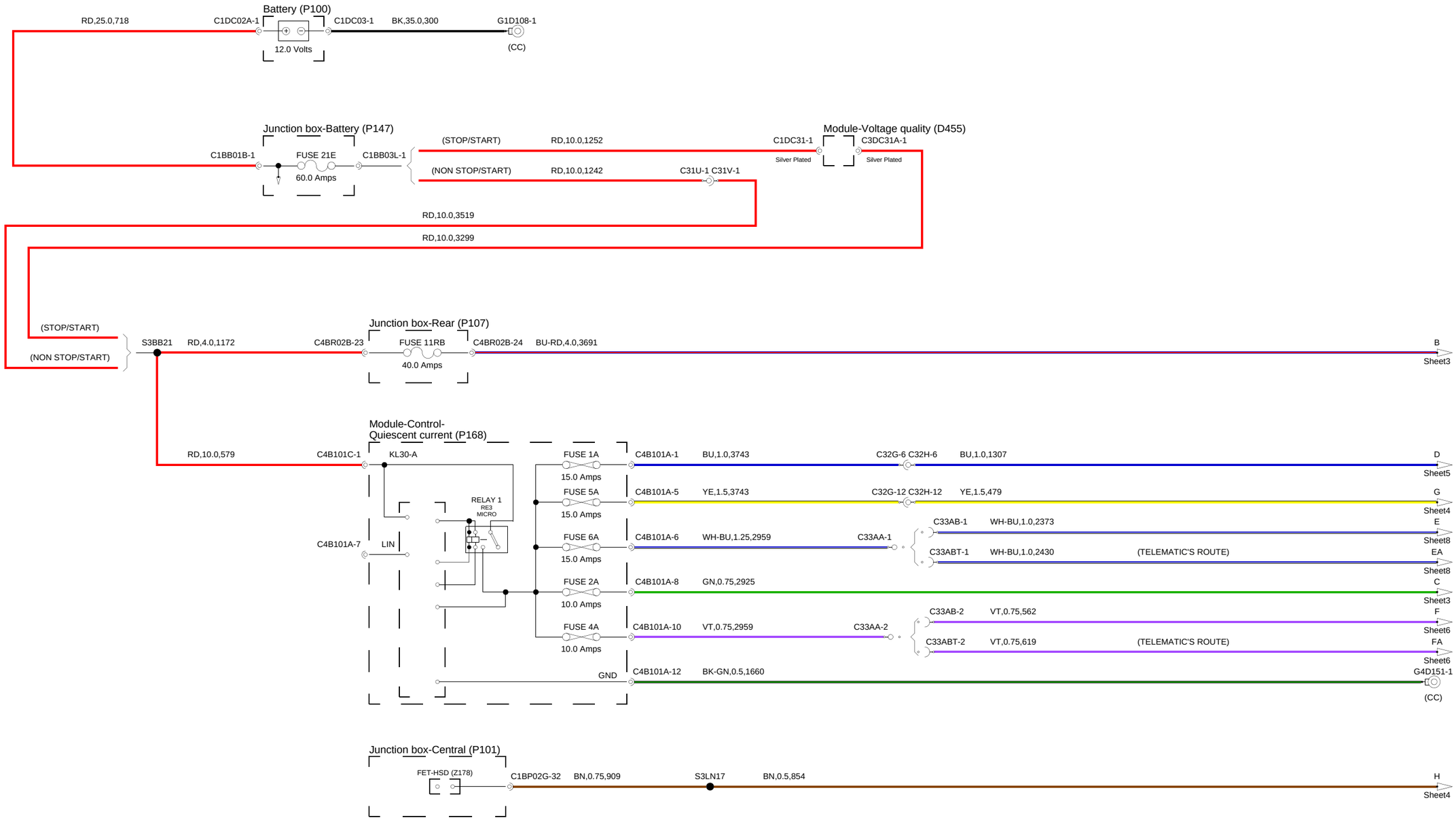
Battery (P100)
RD,25.0,718
C1DC02A-1
C1DC03-1
BK,35.0,300
G1D108-1
12.0 Volts
(CC)
Junction box-Battery (P147)
C1BB01B-1
FUSE 21E
60.0 Amps
C1BB03L-1
(STOP/START)
RD,10.0,1252
C1DC31-1
Silver Plated
Module-Voltage quality (D455)
C3DC31A-1
Silver Plated
(NON STOP/START)
RD,10.0,1242
C31U-1 C31V-1
RD,10.0,3519
RD,10.0,3299
(STOP/START)
(NON STOP/START)
S3BB21
RD,4.0,1172
C4BR02B-23
Junction box-Rear (P107)
FUSE 11RB
40.0 Amps
C4BR02B-24
BU-RD,4.0,3691
B
Sheet3
Module-Control-
Quiescent current (P168)
RD,10.0,579
C4B101C-1
KL30-A
C4B101A-7
LIN
RELAY 1
RE3
MICRO
FUSE 1A
15.0 Amps
C4B101A-1
BU,1.0,3743
C32G-6 C32H-6
BU,1.0,1307
D
Sheet5
FUSE 5A
15.0 Amps
C4B101A-5
YE,1.5,3743
C32G-12 C32H-12
YE,1.5,479
G
Sheet4
FUSE 6A
15.0 Amps
C4B101A-6
WH-BU,1.25,2959
C33AA-1
C33AB-1
WH-BU,1.0,2373
E
Sheet8
C33ABT-1
WH-BU,1.0,2430
(TELEMATIC'S ROUTE)
EA
Sheet8
FUSE 2A
10.0 Amps
C4B101A-8
GN,0.75,2925
C
Sheet3
FUSE 4A
10.0 Amps
C4B101A-10
VT,0.75,2959
C33AA-2
C33AB-2
VT,0.75,562
F
Sheet6
C33ABT-2
VT,0.75,619
(TELEMATIC'S ROUTE)
FA
Sheet6
GND
C4B101A-12
BK-GN,0.5,1660
G4D151-1
(CC)
Junction box-Central (P101)
FET-HSD (Z178)
C1BP02G-32
BN,0.75,909
S3LN17
BN,0.5,854
H
Sheet4

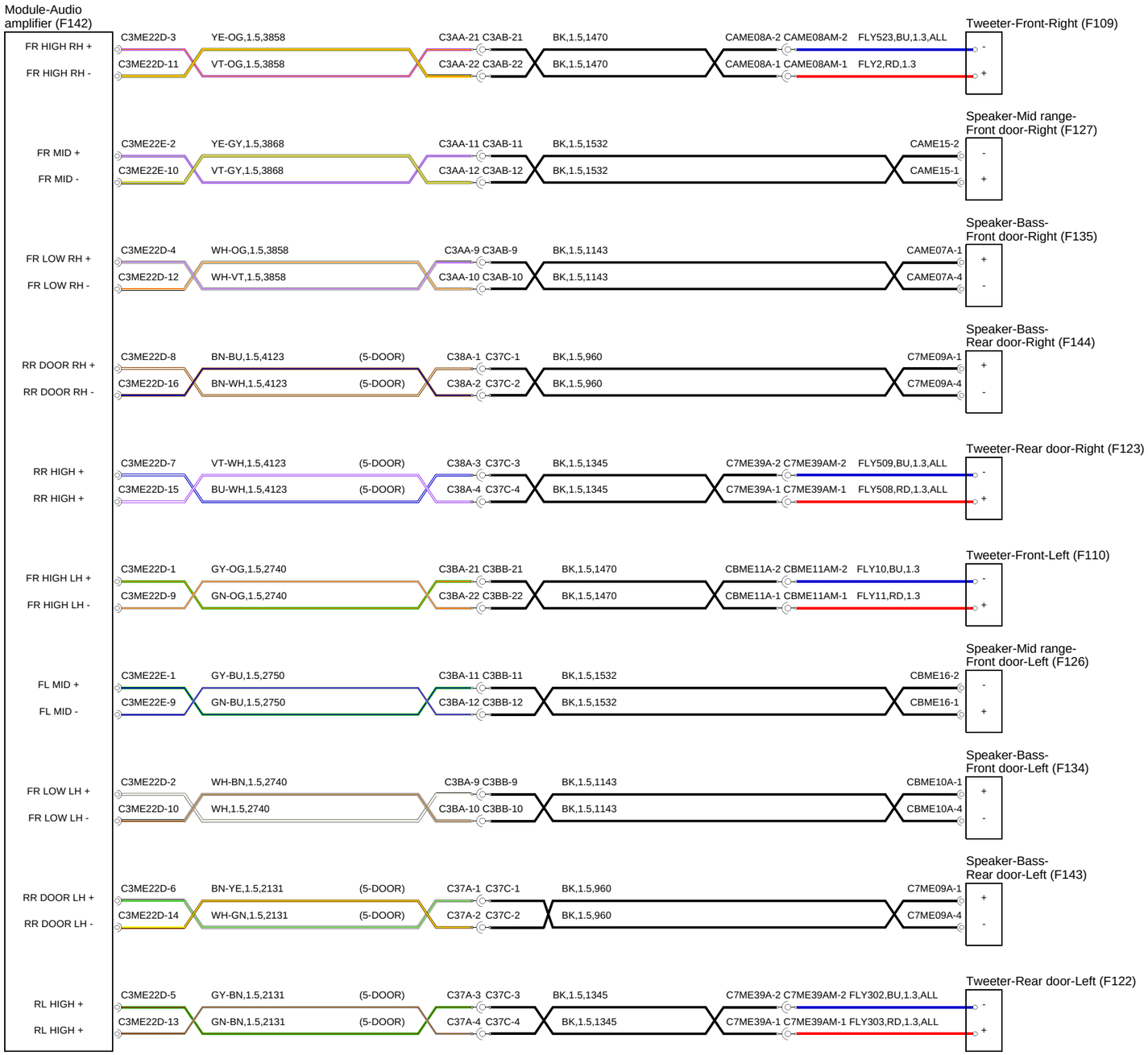
Module-Audio amplifier (F142)
FR HIGH RH +
FR HIGH RH -
C3ME22D-3
C3ME22D-11
YE-OG,1.5,3858
VT-OG,1.5,3858
C3AA-21 C3AB-21
C3AA-22 C3AB-22
BK,1.5,1470
BK,1.5,1470
CAME08A-2 CAME08AM-2
CAME08A-1 CAME08AM-1
FLY523,BU,1.3,ALL
FLY2,RD,1.3
Tweeter-Front-Right (F109)
FR MID +
FR MID -
C3ME22E-2
C3ME22E-10
YE-GY,1.5,3868
VT-GY,1.5,3868
C3AA-11 C3AB-11
C3AA-12 C3AB-12
BK,1.5,1532
BK,1.5,1532
CAME15-2
CAME15-1
Speaker-Mid range-Front door-Right (F127)
FR LOW RH +
FR LOW RH -
C3ME22D-4
C3ME22D-12
WH-OG,1.5,3858
WH-VT,1.5,3858
C3AA-9 C3AB-9
C3AA-10 C3AB-10
BK,1.5,1143
BK,1.5,1143
CAME07A-1
CAME07A-4
Speaker-Bass-Front door-Right (F135)
RR DOOR RH +
RR DOOR RH -
C3ME22D-8
C3ME22D-16
BN-BU,1.5,4123 (5-DOOR)
BN-WH,1.5,4123 (5-DOOR)
C38A-1 C37C-1
C38A-2 C37C-2
BK,1.5,960
BK,1.5,960
C7ME09A-1
C7ME09A-4
Speaker-Bass-Rear door-Right (F144)
RR HIGH +
RR HIGH +
C3ME22D-7
C3ME22D-15
VT-WH,1.5,4123 (5-DOOR)
BU-WH,1.5,4123 (5-DOOR)
C38A-3 C37C-3
C38A-4 C37C-4
BK,1.5,1345
BK,1.5,1345
C7ME39A-2 C7ME39AM-2
C7ME39A-1 C7ME39AM-1
FLY509,BU,1.3,ALL
FLY508,RD,1.3,ALL
Tweeter-Rear door-Right (F123)
FR HIGH LH +
FR HIGH LH -
C3ME22D-1
C3ME22D-9
GY-OG,1.5,2740
GN-OG,1.5,2740
C3BA-21 C3BB-21
C3BA-22 C3BB-22
BK,1.5,1470
BK,1.5,1470
CBME11A-2 CBME11AM-2
CBME11A-1 CBME11AM-1
FLY10,BU,1.3
FLY11,RD,1.3
Tweeter-Front-Left (F110)
FL MID +
FL MID -
C3ME22E-1
C3ME22E-9
GY-BU,1.5,2750
GN-BU,1.5,2750
C3BA-11 C3BB-11
C3BA-12 C3BB-12
BK,1.5,1532
BK,1.5,1532
CBME16-2
CBME16-1
Speaker-Mid range-Front door-Left (F126)
FR LOW LH +
FR LOW LH -
C3ME22D-2
C3ME22D-10
WH-BN,1.5,2740
WH,1.5,2740
C3BA-9 C3BB-9
C3BA-10 C3BB-10
BK,1.5,1143
BK,1.5,1143
CBME10A-1
CBME10A-4
Speaker-Bass-Front door-Left (F134)
RR DOOR LH +
RR DOOR LH -
C3ME22D-6
C3ME22D-14
BN-YE,1.5,2131 (5-DOOR)
WH-GN,1.5,2131 (5-DOOR)
C37A-1 C37C-1
C37A-2 C37C-2
BK,1.5,960
BK,1.5,960
C7ME09A-1
C7ME09A-4
Speaker-Bass-Rear door-Left (F143)
RL HIGH +
RL HIGH +
C3ME22D-5
C3ME22D-13
GY-BN,1.5,2131 (5-DOOR)
GN-BN,1.5,2131 (5-DOOR)
C37A-3 C37C-3
C37A-4 C37C-4
BK,1.5,1345
BK,1.5,1345
C7ME39A-2 C7ME39AM-2
C7ME39A-1 C7ME39AM-1
FLY302,BU,1.3,ALL
FLY303,RD,1.3,ALL
Tweeter-Rear door-Left (F122)

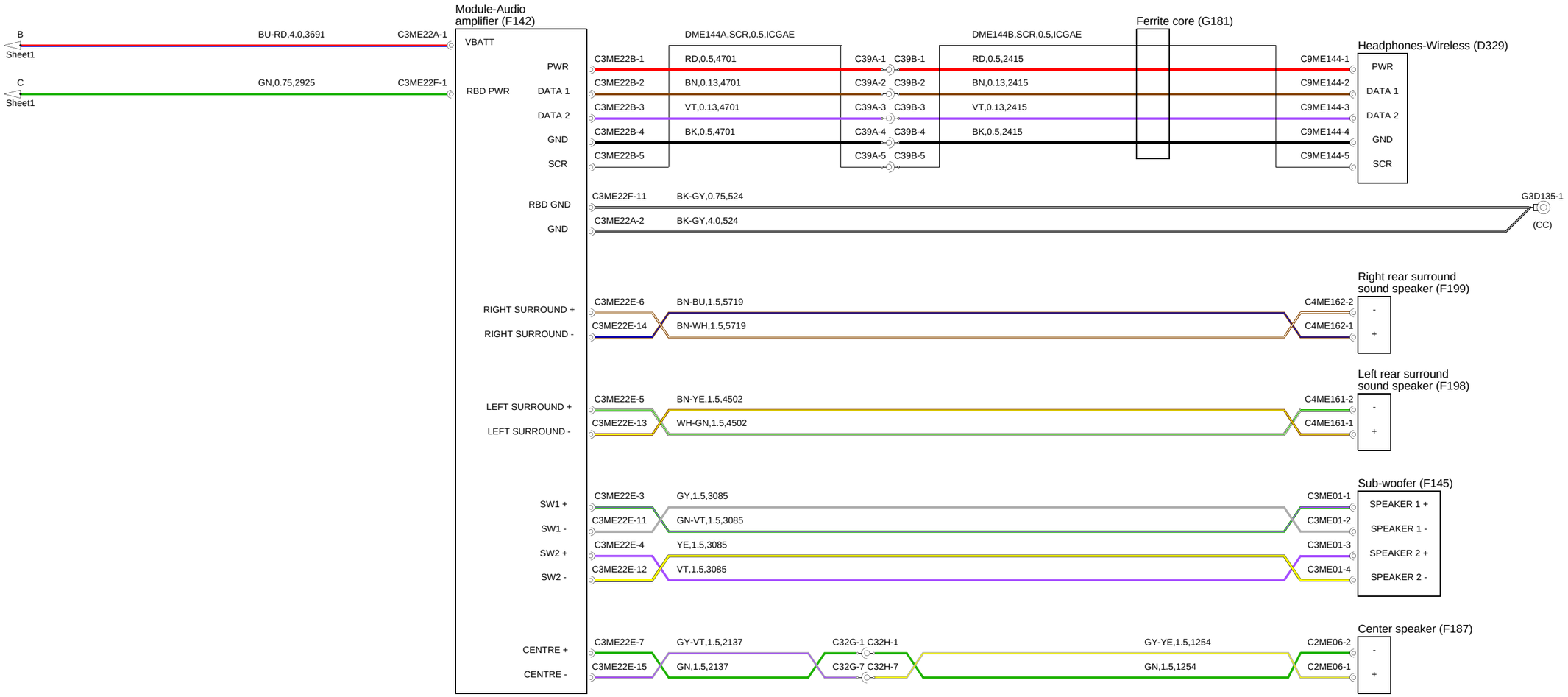
Module-Audio amplifier (F142)
B
Sheet1
BU-RD,4.0,3691
C3ME22A-1
C
Sheet1
GN,0.75,2925
C3ME22F-1
VBATT
RBD PWR
PWR
DATA 1
DATA 2
GND
SCR
RBD GND
GND
RIGHT SURROUND +
RIGHT SURROUND -
LEFT SURROUND +
LEFT SURROUND -
SW1 +
SW1 -
SW2 +
SW2 -
CENTRE +
CENTRE -
DME144A,SCR,0.5,ICGAE
DME144B,SCR,0.5,ICGAE
Ferrite core (G181)
Headphones-Wireless (D329)
C3ME22B-1
RD,0.5,4701
C39A-1 C39B-1
RD,0.5,2415
C9ME144-1
C3ME22B-2
BN,0.13,4701
C39A-2 C39B-2
BN,0.13,2415
C9ME144-2
C3ME22B-3
VT,0.13,4701
C39A-3 C39B-3
VT,0.13,2415
C9ME144-3
C3ME22B-4
BK,0.5,4701
C39A-4 C39B-4
BK,0.5,2415
C9ME144-4
C3ME22B-5
C39A-5 C39B-5
C9ME144-5
C3ME22F-11
BK-GY,0.75,524
G3D135-1
(CC)
C3ME22A-2
BK-GY,4.0,524
Right rear surround sound speaker (F199)
C3ME22E-6
BN-BU,1.5,5719
C4ME162-2
C3ME22E-14
BN-WH,1.5,5719
C4ME162-1
Left rear surround sound speaker (F198)
C3ME22E-5
BN-YE,1.5,4502
C4ME161-2
C3ME22E-13
WH-GN,1.5,4502
C4ME161-1
Sub-woofer (F145)
C3ME22E-3
GY,1.5,3085
C3ME01-1
SPEAKER 1 +
C3ME22E-11
GN-VT,1.5,3085
C3ME01-2
SPEAKER 1 -
C3ME22E-4
YE,1.5,3085
C3ME01-3
SPEAKER 2 +
C3ME22E-12
VT,1.5,3085
C3ME01-4
SPEAKER 2 -
Center speaker (F187)
C3ME22E-7
GY-VT,1.5,2137
C32G-1 C32H-1
GY-YE,1.5,1254
C2ME06-2
C3ME22E-15
GN,1.5,2137
C32G-7 C32H-7
GN,1.5,1254
C2ME06-1

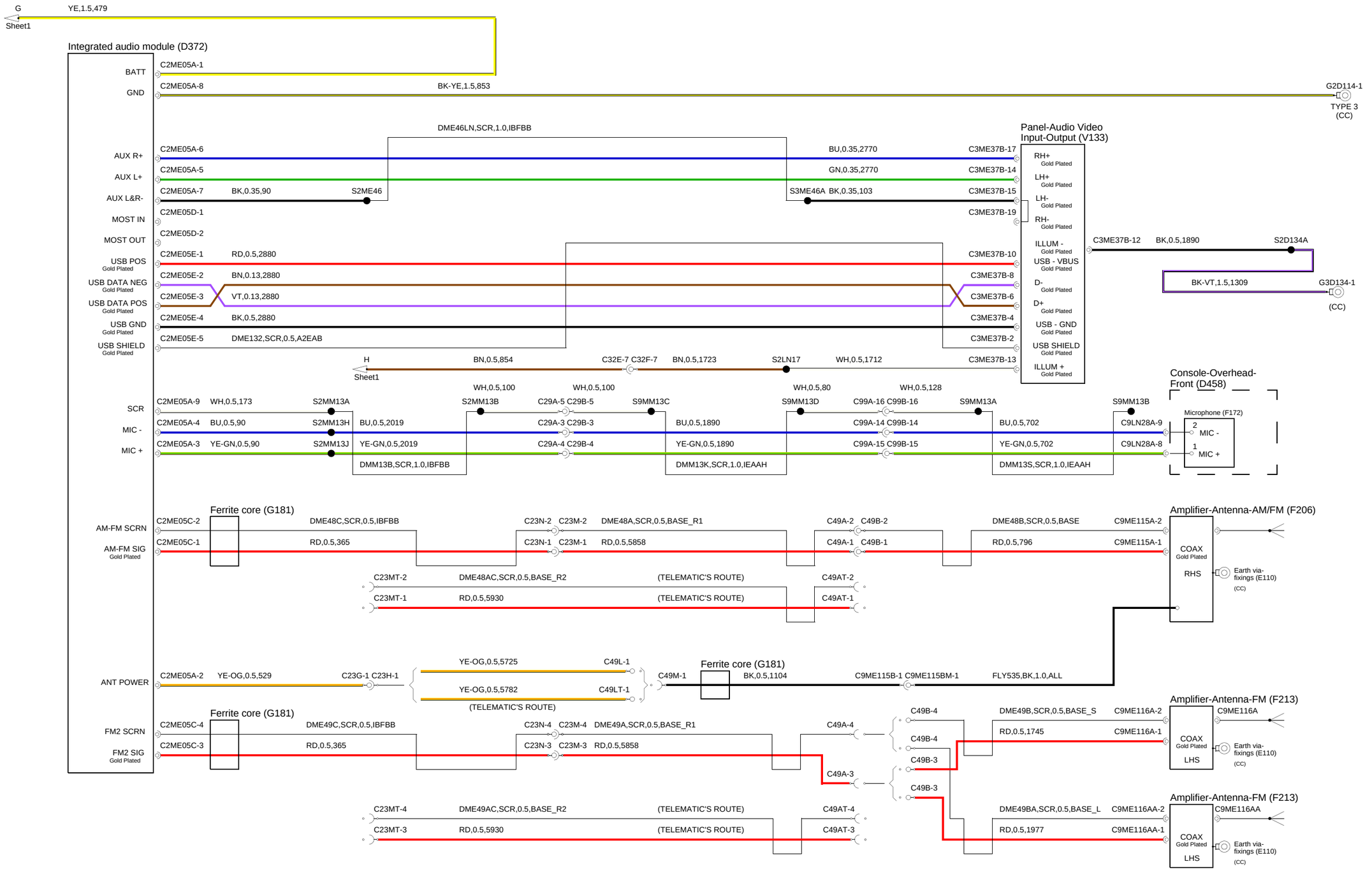
G
YE,1.5,479
Sheet1
Integrated audio module (D372)
BATT
C2ME05A-1
GND
C2ME05A-8
BK-YE,1.5,853
G2D114-1
TYPE 3
(CC)
DME46LN,SCR,1.0,IBFBB
Panel-Audio Video
Input-Output (V133)
AUX R+
C2ME05A-6
BU,0.35,2770
C3ME37B-17
RH+
Gold Plated
AUX L+
C2ME05A-5
GN,0.35,2770
C3ME37B-14
LH+
Gold Plated
AUX L&R-
C2ME05A-7
BK,0.35,90
S2ME46
S3ME46A
BK,0.35,103
C3ME37B-15
LH-
Gold Plated
MOST IN
C2ME05D-1
C3ME37B-19
RH-
Gold Plated
MOST OUT
C2ME05D-2
ILLUM -
Gold Plated
C3ME37B-12
BK,0.5,1890
S2D134A
USB POS
Gold Plated
C2ME05E-1
RD,0.5,2880
C3ME37B-10
USB - VBUS
Gold Plated
USB DATA NEG
Gold Plated
C2ME05E-2
BN,0.13,2880
C3ME37B-8
D-
Gold Plated
BK-VT,1.5,1309
G3D134-1
(CC)
USB DATA POS
Gold Plated
C2ME05E-3
VT,0.13,2880
C3ME37B-6
D+
Gold Plated
USB GND
Gold Plated
C2ME05E-4
BK,0.5,2880
C3ME37B-4
USB - GND
Gold Plated
USB SHIELD
Gold Plated
C2ME05E-5
DME132,SCR,0.5,A2EAB
C3ME37B-2
USB SHIELD
Gold Plated
H
Sheet1
BN,0.5,854
C32E-7 C32F-7
BN,0.5,1723
S2LN17
WH,0.5,1712
C3ME37B-13
ILLUM +
Gold Plated
Console-Overhead-
Front (D458)
WH,0.5,100
WH,0.5,100
WH,0.5,80
WH,0.5,128
SCR
C2ME05A-9
WH,0.5,173
S2MM13A
S2MM13B
C29A-5 C29B-5
S9MM13C
S9MM13D
C99A-16 C99B-16
S9MM13A
S9MM13B
Microphone (F172)
MIC -
C2ME05A-4
BU,0.5,90
S2MM13H
BU,0.5,2019
C29A-3 C29B-3
BU,0.5,1890
C99A-14 C99B-14
BU,0.5,702
C9LN28A-9
2
MIC +
C2ME05A-3
YE-GN,0.5,90
S2MM13J
YE-GN,0.5,2019
C29A-4 C29B-4
YE-GN,0.5,1890
C99A-15 C99B-15
YE-GN,0.5,702
C9LN28A-8
1
DMM13B,SCR,1.0,IBFBB
DMM13K,SCR,1.0,IEAAH
DMM13S,SCR,1.0,IEAAH
Ferrite core (G181)
Amplifier-Antenna-AM/FM (F206)
AM-FM SCRN
C2ME05C-2
DME48C,SCR,0.5,IBFBB
C23N-2 C23M-2
DME48A,SCR,0.5,BASE_R1
C49A-2 C49B-2
DME48B,SCR,0.5,BASE
C9ME115A-2
AM-FM SIG
Gold Plated
C2ME05C-1
RD,0.5,365
C23N-1 C23M-1
RD,0.5,5858
C49A-1 C49B-1
RD,0.5,796
C9ME115A-1
COAX
Gold Plated
RHS
Earth via-
fixings (E110)
(CC)
C23MT-2
DME48AC,SCR,0.5,BASE_R2
(TELEMATIC'S ROUTE)
C49AT-2
C23MT-1
RD,0.5,5930
(TELEMATIC'S ROUTE)
C49AT-1
YE-OG,0.5,5725
C49L-1
ANT POWER
C2ME05A-2
YE-OG,0.5,529
C23G-1 C23H-1
C49M-1
Ferrite core (G181)
BK,0.5,1104
C9ME115B-1 C9ME115BM-1
FLY535,BK,1.0,ALL
YE-OG,0.5,5782
C49LT-1
(TELEMATIC'S ROUTE)
Amplifier-Antenna-FM (F213)
Ferrite core (G181)
C49B-4
DME49B,SCR,0.5,BASE_S
C9ME116A-2
C9ME116A
FM2 SCRN
C2ME05C-4
DME49C,SCR,0.5,IBFBB
C23N-4 C23M-4
DME49A,SCR,0.5,BASE_R1
C49A-4
C49B-4
RD,0.5,1745
C9ME116A-1
FM2 SIG
Gold Plated
C2ME05C-3
RD,0.5,365
C23N-3 C23M-3
RD,0.5,5858
C49B-3
C49A-3
C49B-3
Amplifier-Antenna-FM (F213)
C23MT-4
DME49AC,SCR,0.5,BASE_R2
(TELEMATIC'S ROUTE)
C49AT-4
DME49BA,SCR,0.5,BASE_L
C9ME116AA-2
C9ME116AA
C23MT-3
RD,0.5,5930
(TELEMATIC'S ROUTE)
C49AT-3
RD,0.5,1977
C9ME116AA-1

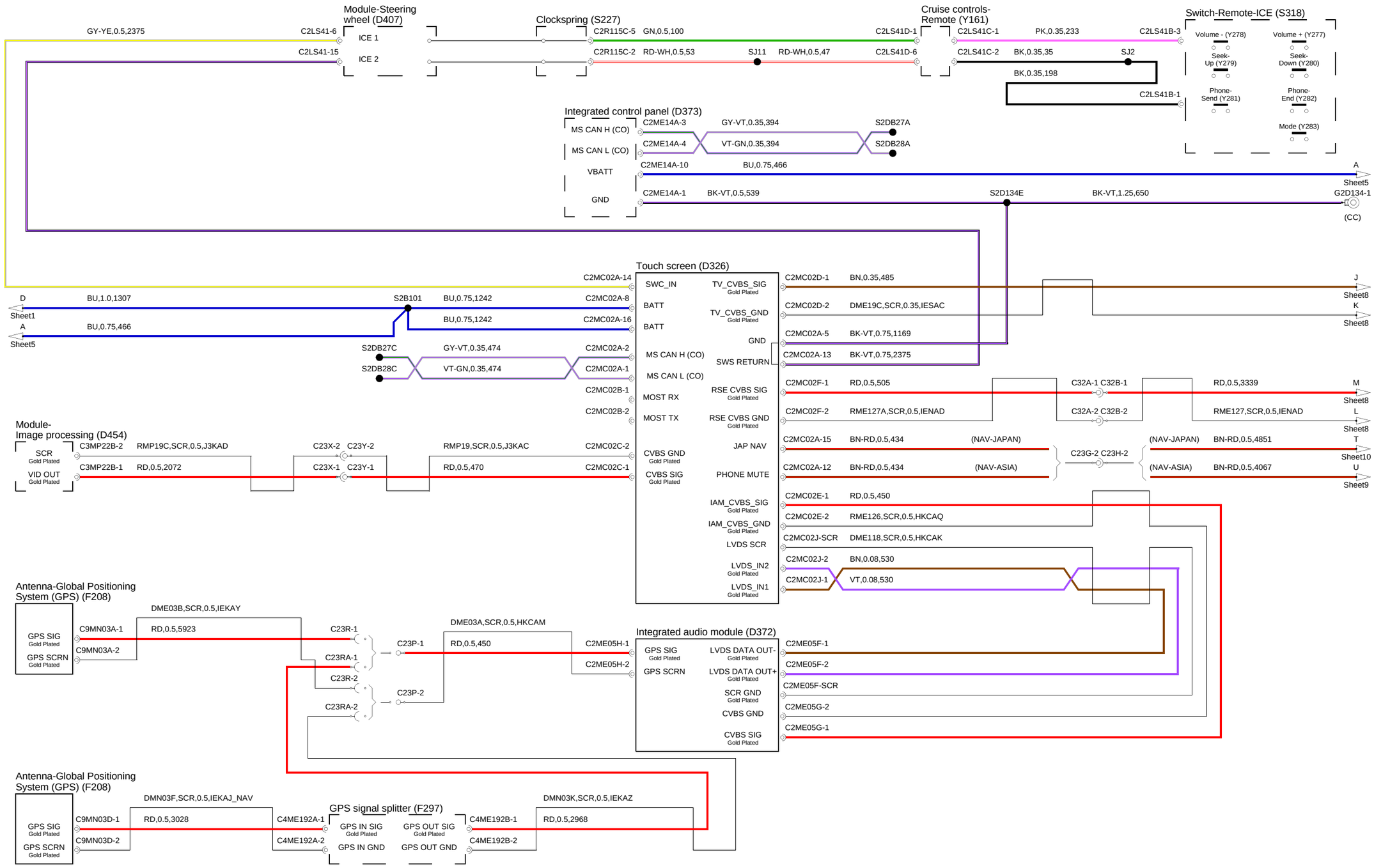
Module-Steering wheel (D407)
ICE 1
ICE 2
Clockspring (S227)
Cruise controls-Remote (Y161)
Switch-Remote-ICE (S318)
Volume - (Y278)
Volume + (Y277)
Seek-Up (Y279)
Seek-Down (Y280)
Phone-Send (Y281)
Phone-End (Y282)
Mode (Y283)
Integrated control panel (D373)
MS CAN H (CO)
MS CAN L (CO)
VBATT
GND
Touch screen (D326)
SWC_IN
BATT
MS CAN H (CO)
MS CAN L (CO)
MOST RX
MOST TX
CVBS GND
CVBS SIG
TV_CVBS_SIG
TV_CVBS_GND
SWS RETURN
RSE CVBS SIG
RSE CVBS GND
JAP NAV
PHONE MUTE
IAM_CVBS_SIG
IAM_CVBS_GND
LVDS SCR
LVDS_IN2
LVDS_IN1
Module-Image processing (D454)
SCR
VID OUT
Antenna-Global Positioning System (GPS) (F208)
GPS SIG
GPS SCRN
Integrated audio module (D372)
LVDS DATA OUT-
LVDS DATA OUT+
SCR GND
GPS signal splitter (F297)
GPS IN SIG
GPS IN GND
GPS OUT SIG
GPS OUT GND

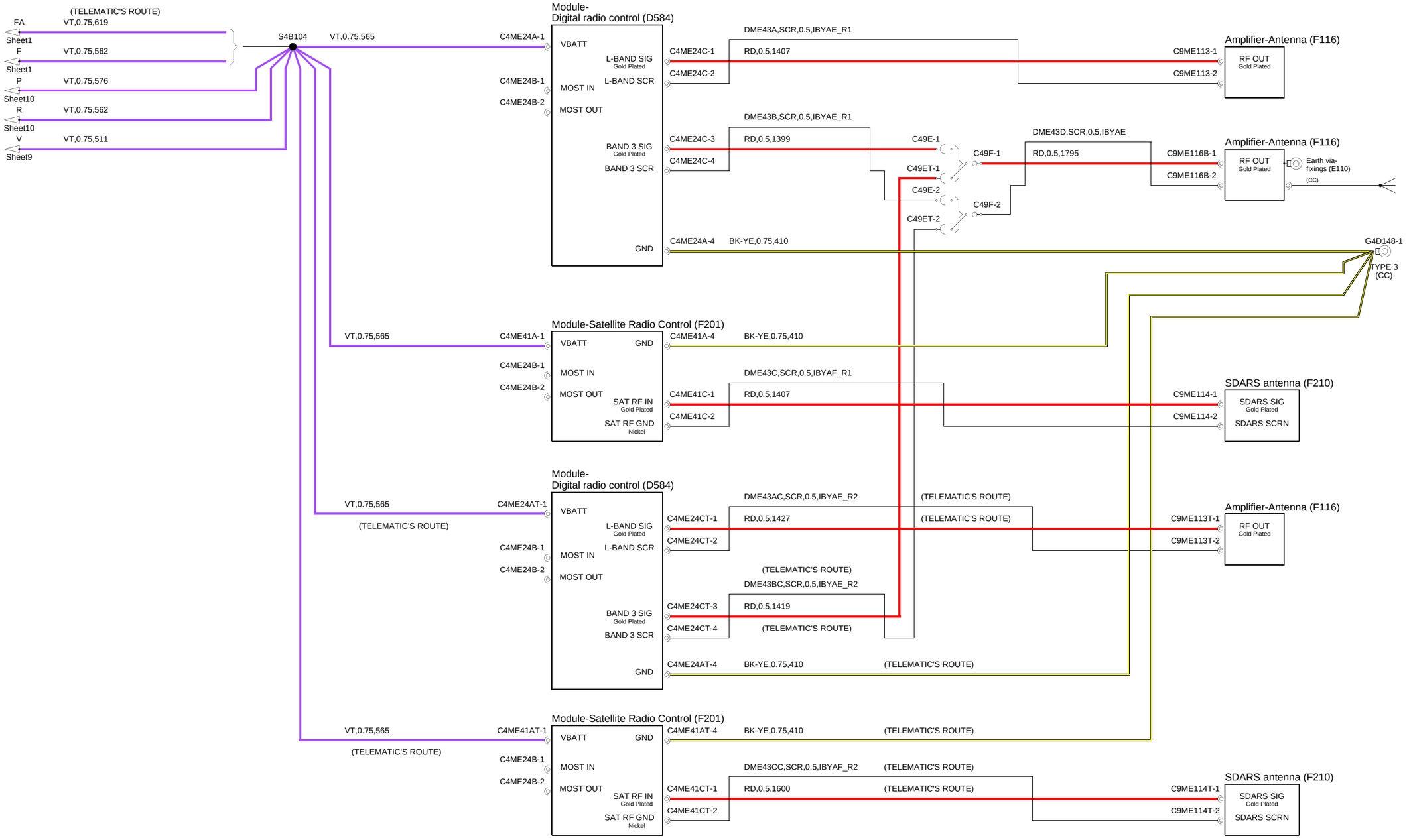
(TELEMATIC'S ROUTE)
FA
VT,0.75,619
Sheet1
F
VT,0.75,562
Sheet1
P
VT,0.75,576
Sheet10
R
VT,0.75,562
Sheet10
V
VT,0.75,511
Sheet9
S4B104
VT,0.75,565
Module-
Digital radio control (D584)
C4ME24A-1
VBATT
L-BAND SIG
Gold Plated
L-BAND SCR
C4ME24B-1
MOST IN
C4ME24B-2
MOST OUT
BAND 3 SIG
Gold Plated
BAND 3 SCR
GND
C4ME24C-1
C4ME24C-2
C4ME24C-3
C4ME24C-4
C4ME24A-4
DME43A,SCR,0.5,IBYAE_R1
RD,0.5,1407
DME43B,SCR,0.5,IBYAE_R1
RD,0.5,1399
BK-YE,0.75,410
Amplifier-Antenna (F116)
C9ME113-1
C9ME113-2
RF OUT
Gold Plated
C49E-1
C49ET-1
C49E-2
C49ET-2
C49F-1
C49F-2
DME43D,SCR,0.5,IBYAE
RD,0.5,1795
C9ME116B-1
C9ME116B-2
Amplifier-Antenna (F116)
RF OUT
Gold Plated
Earth via-
fixings (E110)
(CC)
G4D148-1
TYPE 3
(CC)
Module-Satellite Radio Control (F201)
VT,0.75,565
C4ME41A-1
VBATT
GND
C4ME24B-1
MOST IN
C4ME24B-2
MOST OUT
SAT RF IN
Gold Plated
SAT RF GND
Nickel
C4ME41A-4
BK-YE,0.75,410
DME43C,SCR,0.5,IBYAF_R1
C4ME41C-1
C4ME41C-2
RD,0.5,1407
SDARS antenna (F210)
C9ME114-1
C9ME114-2
SDARS SIG
Gold Plated
SDARS SCRN
Module-
Digital radio control (D584)
VT,0.75,565
(TELEMATIC'S ROUTE)
C4ME24AT-1
VBATT
L-BAND SIG
Gold Plated
L-BAND SCR
C4ME24B-1
MOST IN
C4ME24B-2
MOST OUT
BAND 3 SIG
Gold Plated
BAND 3 SCR
GND
C4ME24CT-1
C4ME24CT-2
C4ME24CT-3
C4ME24CT-4
C4ME24AT-4
DME43AC,SCR,0.5,IBYAE_R2
(TELEMATIC'S ROUTE)
RD,0.5,1427
(TELEMATIC'S ROUTE)
(TELEMATIC'S ROUTE)
DME43BC,SCR,0.5,IBYAE_R2
RD,0.5,1419
(TELEMATIC'S ROUTE)
BK-YE,0.75,410
(TELEMATIC'S ROUTE)
Amplifier-Antenna (F116)
C9ME113T-1
C9ME113T-2
RF OUT
Gold Plated
Module-Satellite Radio Control (F201)
VT,0.75,565
(TELEMATIC'S ROUTE)
C4ME41AT-1
VBATT
GND
C4ME24B-1
MOST IN
C4ME24B-2
MOST OUT
SAT RF IN
Gold Plated
SAT RF GND
Nickel
C4ME41AT-4
BK-YE,0.75,410
(TELEMATIC'S ROUTE)
DME43CC,SCR,0.5,IBYAF_R2
(TELEMATIC'S ROUTE)
C4ME41CT-1
C4ME41CT-2
RD,0.5,1600
(TELEMATIC'S ROUTE)
SDARS antenna (F210)
C9ME114T-1
C9ME114T-2
SDARS SIG
Gold Plated
SDARS SCRN

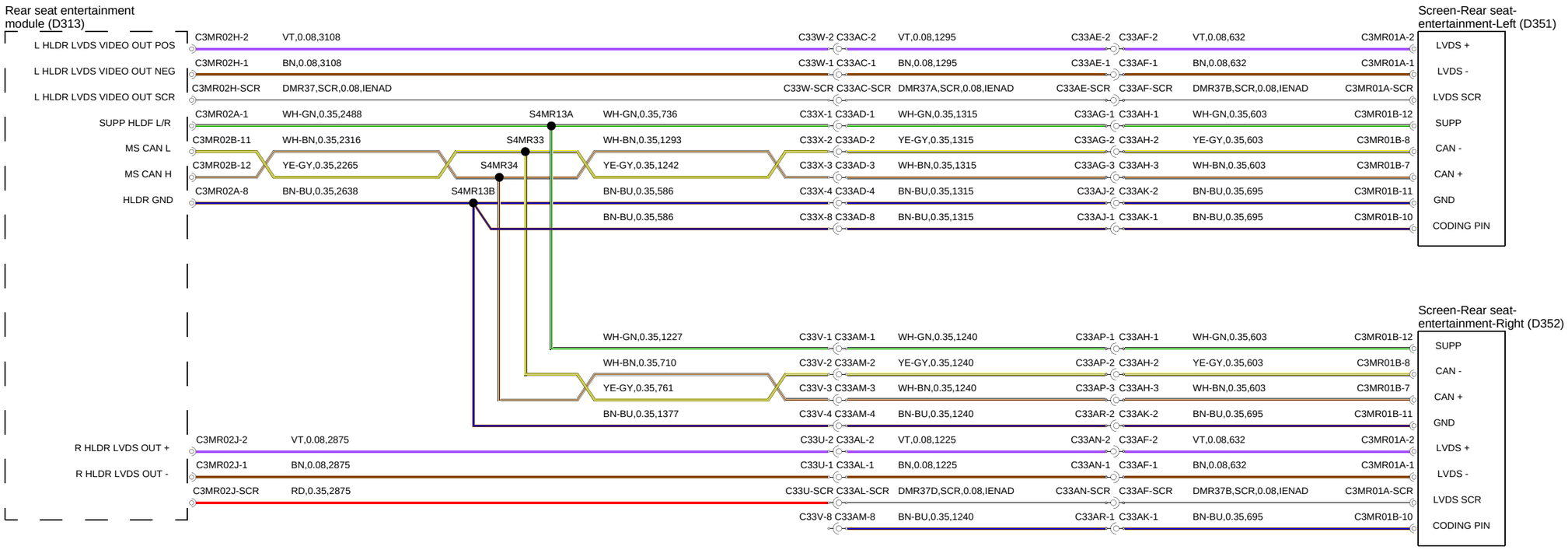
Rear seat entertainment module (D313)
L HLDR LVDS VIDEO OUT POS
L HLDR LVDS VIDEO OUT NEG
L HLDR LVDS VIDEO OUT SCR
SUPP HLDF L/R
MS CAN L
MS CAN H
HLDR GND
R HLDR LVDS OUT +
R HLDR LVDS OUT -
C3MR02H-2 VT,0.08,3108 C33W-2 C33AC-2 VT,0.08,1295 C33AE-2 C33AF-2 VT,0.08,632 C3MR01A-2
C3MR02H-1 BN,0.08,3108 C33W-1 C33AC-1 BN,0.08,1295 C33AE-1 C33AF-1 BN,0.08,632 C3MR01A-1
C3MR02H-SCR DMR37,SCR,0.08,IENAD C33W-SCR C33AC-SCR DMR37A,SCR,0.08,IENAD C33AE-SCR C33AF-SCR DMR37B,SCR,0.08,IENAD C3MR01A-SCR
C3MR02A-1 WH-GN,0.35,2488 S4MR13A WH-GN,0.35,736 C33X-1 C33AD-1 WH-GN,0.35,1315 C33AG-1 C33AH-1 WH-GN,0.35,603 C3MR01B-12
C3MR02B-11 WH-BN,0.35,2316 S4MR33 WH-BN,0.35,1293 C33X-2 C33AD-2 YE-GY,0.35,1315 C33AG-2 C33AH-2 YE-GY,0.35,603 C3MR01B-8
C3MR02B-12 YE-GY,0.35,2265 S4MR34 YE-GY,0.35,1242 C33X-3 C33AD-3 WH-BN,0.35,1315 C33AG-3 C33AH-3 WH-BN,0.35,603 C3MR01B-7
C3MR02A-8 BN-BU,0.35,2638 S4MR13B BN-BU,0.35,586 C33X-4 C33AD-4 BN-BU,0.35,1315 C33AJ-2 C33AK-2 BN-BU,0.35,695 C3MR01B-11
BN-BU,0.35,586 C33X-8 C33AD-8 BN-BU,0.35,1315 C33AJ-1 C33AK-1 BN-BU,0.35,695 C3MR01B-10
Screen-Rear seat-entertainment-Left (D351)
LVDS +
LVDS -
LVDS SCR
SUPP
CAN -
CAN +
GND
CODING PIN
WH-GN,0.35,1227 C33V-1 C33AM-1 WH-GN,0.35,1240 C33AP-1 C33AH-1 WH-GN,0.35,603 C3MR01B-12
WH-BN,0.35,710 C33V-2 C33AM-2 YE-GY,0.35,1240 C33AP-2 C33AH-2 YE-GY,0.35,603 C3MR01B-8
YE-GY,0.35,761 C33V-3 C33AM-3 WH-BN,0.35,1240 C33AP-3 C33AH-3 WH-BN,0.35,603 C3MR01B-7
BN-BU,0.35,1377 C33V-4 C33AM-4 BN-BU,0.35,1240 C33AR-2 C33AK-2 BN-BU,0.35,695 C3MR01B-11
C3MR02J-2 VT,0.08,2875 C33U-2 C33AL-2 VT,0.08,1225 C33AN-2 C33AF-2 VT,0.08,632 C3MR01A-2
C3MR02J-1 BN,0.08,2875 C33U-1 C33AL-1 BN,0.08,1225 C33AN-1 C33AF-1 BN,0.08,632 C3MR01A-1
C3MR02J-SCR RD,0.35,2875 C33U-SCR C33AL-SCR DMR37D,SCR,0.08,IENAD C33AN-SCR C33AF-SCR DMR37B,SCR,0.08,IENAD C3MR01A-SCR
C33V-8 C33AM-8 BN-BU,0.35,1240 C33AR-1 C33AK-1 BN-BU,0.35,695 C3MR01B-10
Screen-Rear seat-entertainment-Right (D352)
SUPP
CAN -
CAN +
GND
LVDS +
LVDS -
LVDS SCR
CODING PIN

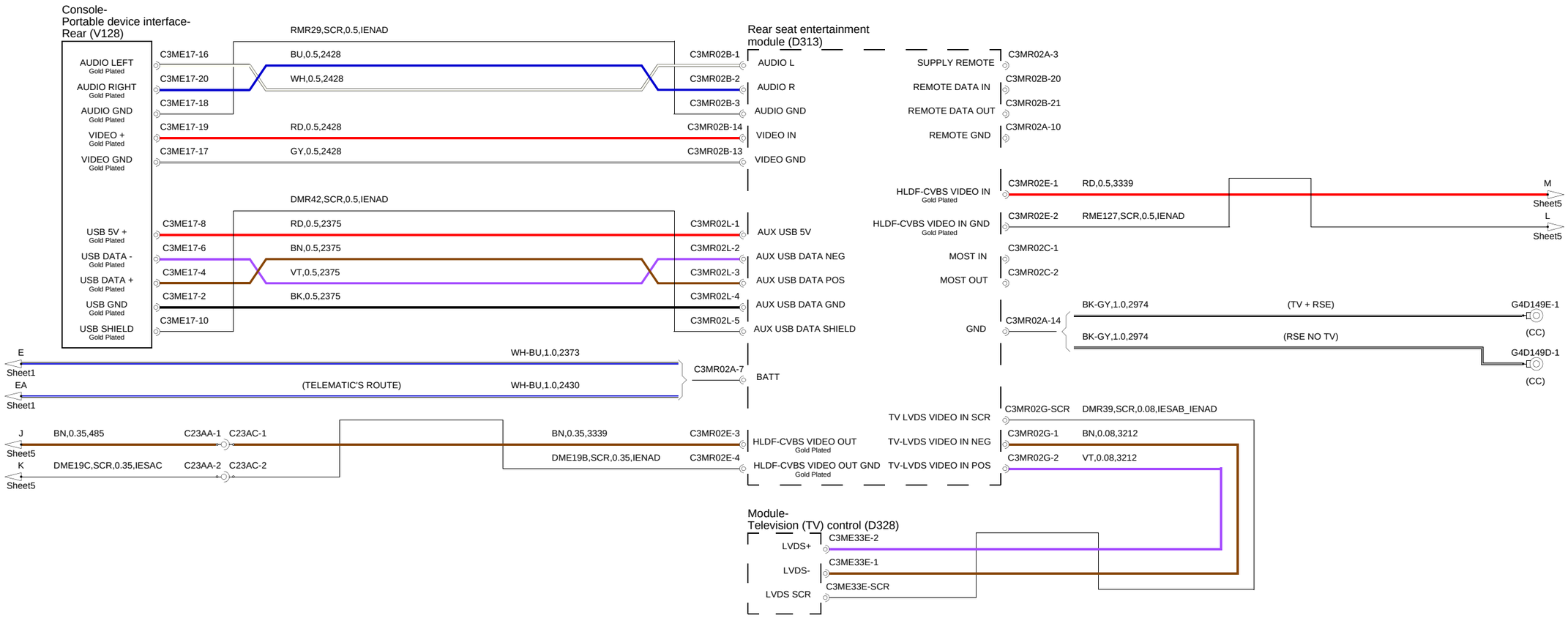
Console-
Portable device interface-
Rear (V128)
AUDIO LEFT
Gold Plated
AUDIO RIGHT
Gold Plated
AUDIO GND
Gold Plated
VIDEO +
Gold Plated
VIDEO GND
Gold Plated
USB 5V +
Gold Plated
USB DATA -
Gold Plated
USB DATA +
Gold Plated
USB GND
Gold Plated
USB SHIELD
Gold Plated
RMR29,SCR,0.5,IENAD
C3ME17-16
BU,0.5,2428
C3ME17-20
WH,0.5,2428
C3ME17-18
C3ME17-19
RD,0.5,2428
C3ME17-17
GY,0.5,2428
DMR42,SCR,0.5,IENAD
C3ME17-8
RD,0.5,2375
C3ME17-6
BN,0.5,2375
C3ME17-4
VT,0.5,2375
C3ME17-2
BK,0.5,2375
C3ME17-10
Rear seat entertainment
module (D313)
C3MR02B-1
AUDIO L
C3MR02B-2
AUDIO R
C3MR02B-3
AUDIO GND
C3MR02B-14
VIDEO IN
C3MR02B-13
VIDEO GND
C3MR02L-1
AUX USB 5V
C3MR02L-2
AUX USB DATA NEG
C3MR02L-3
AUX USB DATA POS
C3MR02L-4
AUX USB DATA GND
C3MR02L-5
AUX USB DATA SHIELD
SUPPLY REMOTE
C3MR02A-3
REMOTE DATA IN
C3MR02B-20
REMOTE DATA OUT
C3MR02B-21
REMOTE GND
C3MR02A-10
HLDF-CVBS VIDEO IN
Gold Plated
C3MR02E-1
RD,0.5,3339
M
Sheet5
HLDF-CVBS VIDEO IN GND
Gold Plated
C3MR02E-2
RME127,SCR,0.5,IENAD
L
Sheet5
MOST IN
C3MR02C-1
MOST OUT
C3MR02C-2
GND
C3MR02A-14
BK-GY,1.0,2974
(TV + RSE)
G4D149E-1
(CC)
BK-GY,1.0,2974
(RSE NO TV)
G4D149D-1
(CC)
E
Sheet1
WH-BU,1.0,2373
EA
Sheet1
(TELEMATIC'S ROUTE)
WH-BU,1.0,2430
C3MR02A-7
BATT
TV LVDS VIDEO IN SCR
C3MR02G-SCR
DMR39,SCR,0.08,IESAB_IENAD
TV-LVDS VIDEO IN NEG
C3MR02G-1
BN,0.08,3212
TV-LVDS VIDEO IN POS
C3MR02G-2
VT,0.08,3212
J
Sheet5
BN,0.35,485
C23AA-1
C23AC-1
BN,0.35,3339
C3MR02E-3
HLDF-CVBS VIDEO OUT
Gold Plated
K
Sheet5
DME19C,SCR,0.35,IESAC
C23AA-2
C23AC-2
DME19B,SCR,0.35,IENAD
C3MR02E-4
HLDF-CVBS VIDEO OUT GND
Gold Plated
Module-
Television (TV) control (D328)
LVDS+
C3ME33E-2
LVDS-
C3ME33E-1
LVDS SCR
C3ME33E-SCR

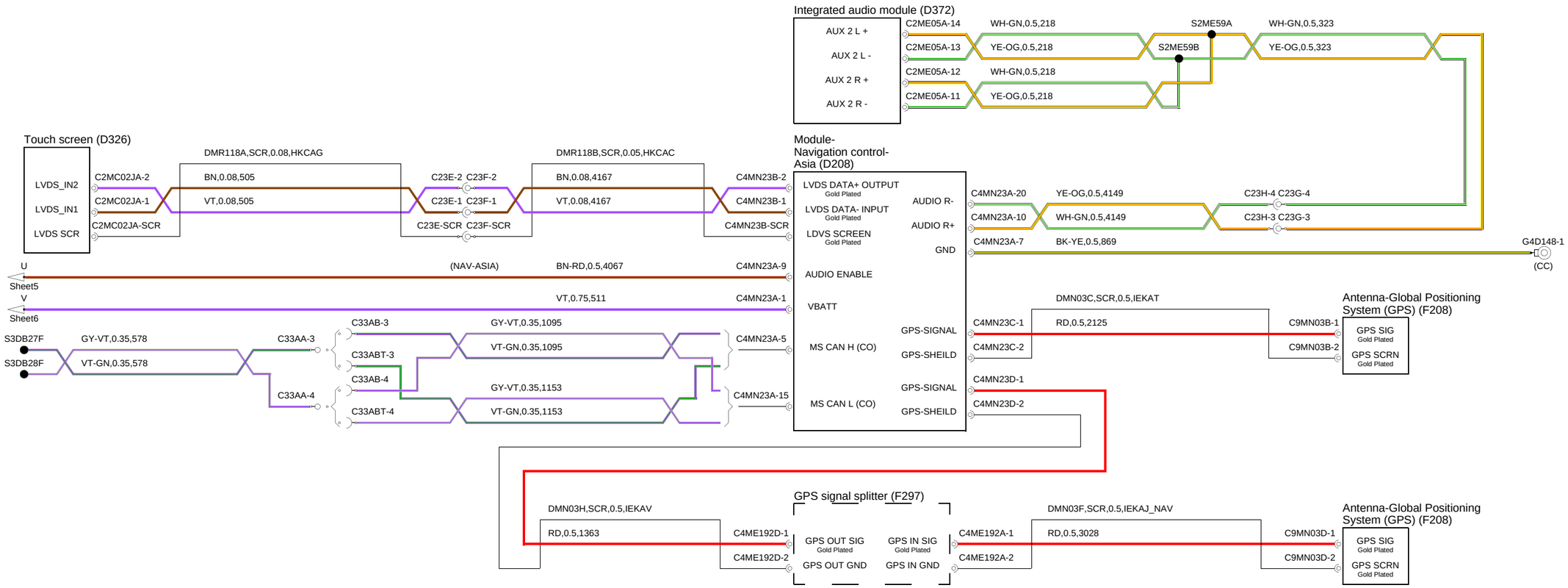
Integrated audio module (D372)
AUX 2 L +
AUX 2 L -
AUX 2 R +
AUX 2 R -
C2ME05A-14
C2ME05A-13
C2ME05A-12
C2ME05A-11
WH-GN,0.5,218
YE-OG,0.5,218
WH-GN,0.5,218
YE-OG,0.5,218
S2ME59A
S2ME59B
WH-GN,0.5,323
YE-OG,0.5,323
Touch screen (D326)
LVDS_IN2
LVDS_IN1
LVDS SCR
C2MC02JA-2
C2MC02JA-1
C2MC02JA-SCR
DMR118A,SCR,0.08,HKCAG
BN,0.08,505
VT,0.08,505
C23E-2 C23F-2
C23E-1 C23F-1
C23E-SCR C23F-SCR
DMR118B,SCR,0.05,HKCAC
BN,0.08,4167
VT,0.08,4167
C4MN23B-2
C4MN23B-1
C4MN23B-SCR
Module-
Navigation control-
Asia (D208)
LVDS DATA+ OUTPUT
Gold Plated
LVDS DATA- INPUT
Gold Plated
LDVS SCREEN
Gold Plated
AUDIO ENABLE
VBATT
MS CAN H (CO)
MS CAN L (CO)
AUDIO R-
AUDIO R+
GND
GPS-SIGNAL
GPS-SHEILD
GPS-SIGNAL
GPS-SHEILD
C4MN23A-20
C4MN23A-10
C4MN23A-7
YE-OG,0.5,4149
WH-GN,0.5,4149
BK-YE,0.5,869
C23H-4 C23G-4
C23H-3 C23G-3
G4D148-1
(CC)
U
Sheet5
(NAV-ASIA)
BN-RD,0.5,4067
C4MN23A-9
V
Sheet6
VT,0.75,511
C4MN23A-1
S3DB27F
S3DB28F
GY-VT,0.35,578
VT-GN,0.35,578
C33AA-3
C33AA-4
C33AB-3
C33ABT-3
C33AB-4
C33ABT-4
GY-VT,0.35,1095
VT-GN,0.35,1095
GY-VT,0.35,1153
VT-GN,0.35,1153
C4MN23A-5
C4MN23A-15
DMN03C,SCR,0.5,IEKAT
C4MN23C-1
C4MN23C-2
RD,0.5,2125
C9MN03B-1
C9MN03B-2
Antenna-Global Positioning
System (GPS) (F208)
GPS SIG
Gold Plated
GPS SCRN
Gold Plated
C4MN23D-1
C4MN23D-2
GPS signal splitter (F297)
DMN03H,SCR,0.5,IEKAV
RD,0.5,1363
C4ME192D-1
C4ME192D-2
GPS OUT SIG
Gold Plated
GPS OUT GND
GPS IN SIG
Gold Plated
GPS IN GND
C4ME192A-1
C4ME192A-2
DMN03F,SCR,0.5,IEKAJ_NAV
RD,0.5,3028
C9MN03D-1
C9MN03D-2
Antenna-Global Positioning
System (GPS) (F208)
GPS SIG
Gold Plated
GPS SCRN
Gold Plated

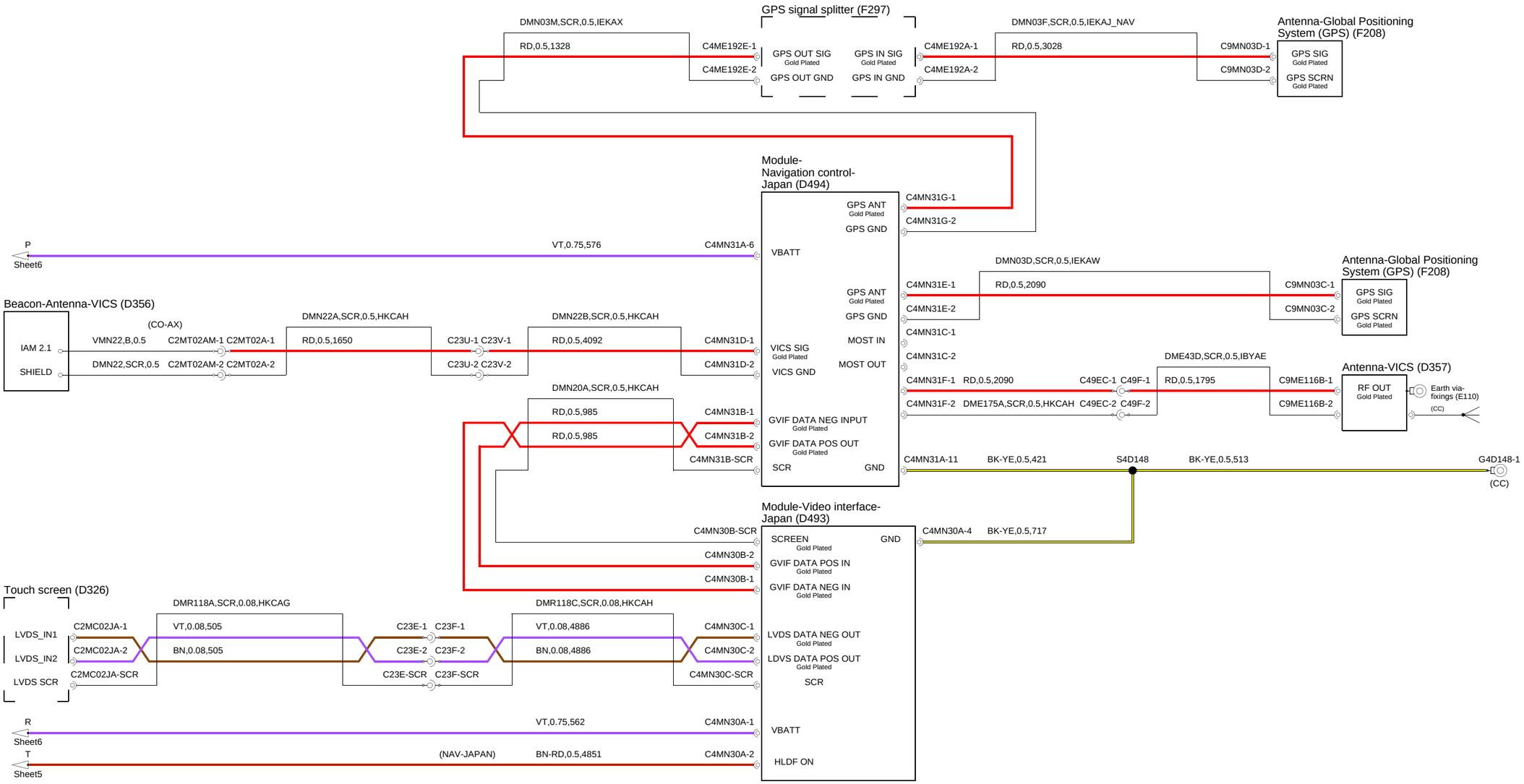
GPS signal splitter (F297)
DMN03M,SCR,0.5,IEKAX
RD,0.5,1328
C4ME192E-1
C4ME192E-2
GPS OUT SIG
Gold Plated
GPS OUT GND
GPS IN SIG
Gold Plated
GPS IN GND
C4ME192A-1
C4ME192A-2
DMN03F,SCR,0.5,IEKAJ_NAV
RD,0.5,3028
C9MN03D-1
C9MN03D-2
Antenna-Global Positioning System (GPS) (F208)
GPS SIG
Gold Plated
GPS SCRN
Gold Plated
Module-Navigation control-Japan (D494)
GPS ANT
Gold Plated
GPS GND
C4MN31G-1
C4MN31G-2
P
Sheet6
VT,0.75,576
C4MN31A-6
VBATT
DMN03D,SCR,0.5,IEKAW
Antenna-Global Positioning System (GPS) (F208)
C4MN31E-1
C4MN31E-2
RD,0.5,2090
C9MN03C-1
C9MN03C-2
GPS SIG
Gold Plated
GPS SCRN
Gold Plated
Beacon-Antenna-VICS (D356)
IAM 2.1
SHIELD
(CO-AX)
VMN22,B,0.5
C2MT02AM-1
C2MT02A-1
DMN22,SCR,0.5
C2MT02AM-2
C2MT02A-2
DMN22A,SCR,0.5,HKCAH
RD,0.5,1650
C23U-1
C23V-1
C23U-2
C23V-2
DMN22B,SCR,0.5,HKCAH
RD,0.5,4092
C4MN31D-1
C4MN31D-2
VICS SIG
Gold Plated
VICS GND
MOST IN
MOST OUT
C4MN31C-1
C4MN31C-2
DME43D,SCR,0.5,IBYAE
Antenna-VICS (D357)
C4MN31F-1
RD,0.5,2090
C49EC-1
C49F-1
RD,0.5,1795
C9ME116B-1
RF OUT
Gold Plated
Earth via-fixings (E110)
(CC)
C4MN31F-2
DME175A,SCR,0.5,HKCAH
C49EC-2
C49F-2
C9ME116B-2
DMN20A,SCR,0.5,HKCAH
RD,0.5,985
RD,0.5,985
C4MN31B-1
C4MN31B-2
C4MN31B-SCR
GVIF DATA NEG INPUT
Gold Plated
GVIF DATA POS OUT
Gold Plated
SCR
GND
C4MN31A-11
BK-YE,0.5,421
S4D148
BK-YE,0.5,513
G4D148-1
(CC)
Module-Video interface-Japan (D493)
C4MN30B-SCR
C4MN30B-2
C4MN30B-1
SCREEN
Gold Plated
GND
GVIF DATA POS IN
Gold Plated
GVIF DATA NEG IN
Gold Plated
C4MN30A-4
BK-YE,0.5,717
Touch screen (D326)
LVDS_IN1
LVDS_IN2
LVDS SCR
C2MC02JA-1
C2MC02JA-2
C2MC02JA-SCR
DMR118A,SCR,0.08,HKCAG
VT,0.08,505
BN,0.08,505
C23E-1
C23F-1
C23E-2
C23F-2
C23E-SCR
C23F-SCR
DMR118C,SCR,0.08,HKCAH
VT,0.08,4886
BN,0.08,4886
C4MN30C-1
C4MN30C-2
C4MN30C-SCR
LVDS DATA NEG OUT
Gold Plated
LDVS DATA POS OUT
Gold Plated
SCR
R
Sheet6
VT,0.75,562
C4MN30A-1
VBATT
T
Sheet5
(NAV-JAPAN)
BN-RD,0.5,4851
C4MN30A-2
HLDF ON

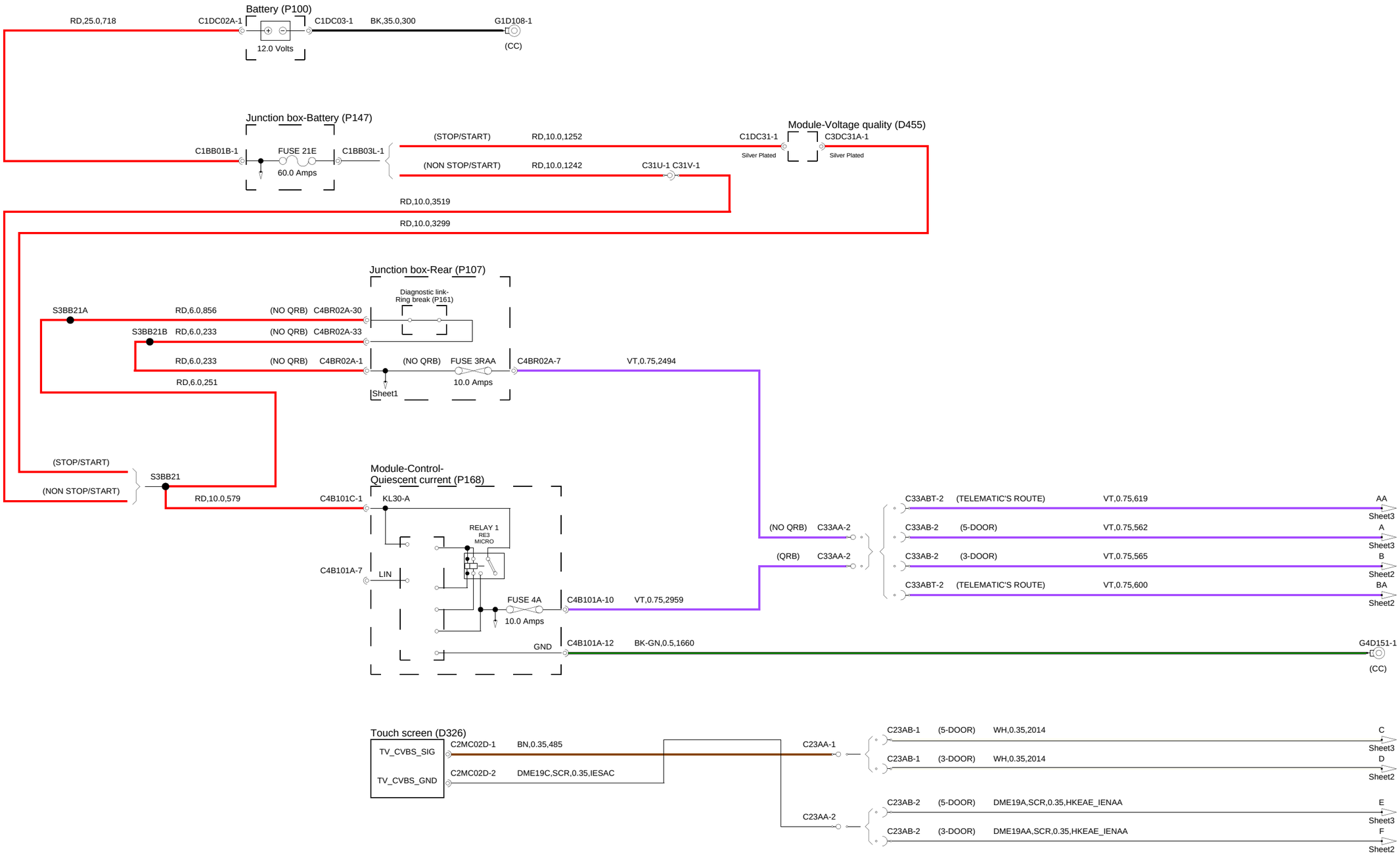
Battery (P100)
RD,25.0,718
C1DC02A-1
C1DC03-1
BK,35.0,300
G1D108-1
12.0 Volts
(CC)
Junction box-Battery (P147)
C1BB01B-1
FUSE 21E
C1BB03L-1
60.0 Amps
(STOP/START)
RD,10.0,1252
C1DC31-1
C3DC31A-1
Silver Plated
Silver Plated
Module-Voltage quality (D455)
(NON STOP/START)
RD,10.0,1242
C31U-1 C31V-1
RD,10.0,3519
RD,10.0,3299
Junction box-Rear (P107)
Diagnostic link-
Ring break (P161)
S3BB21A
RD,6.0,856
(NO QRB)
C4BR02A-30
S3BB21B
RD,6.0,233
(NO QRB)
C4BR02A-33
RD,6.0,233
(NO QRB)
C4BR02A-1
(NO QRB)
FUSE 3RAA
C4BR02A-7
VT,0.75,2494
RD,6.0,251
10.0 Amps
Sheet1
(STOP/START)
(NON STOP/START)
S3BB21
RD,10.0,579
C4B101C-1
Module-Control-
Quiescent current (P168)
KL30-A
RELAY 1
RE3
MICRO
C4B101A-7
LIN
FUSE 4A
10.0 Amps
C4B101A-10
VT,0.75,2959
GND
C4B101A-12
BK-GN,0.5,1660
G4D151-1
(CC)
(NO QRB)
C33AA-2
(QRB)
C33AA-2
C33ABT-2
(TELEMATIC'S ROUTE)
VT,0.75,619
AA
Sheet3
C33AB-2
(5-DOOR)
VT,0.75,562
A
Sheet3
C33AB-2
(3-DOOR)
VT,0.75,565
B
Sheet2
C33ABT-2
(TELEMATIC'S ROUTE)
VT,0.75,600
BA
Sheet2
Touch screen (D326)
TV_CVBS_SIG
TV_CVBS_GND
C2MC02D-1
BN,0.35,485
C2MC02D-2
DME19C,SCR,0.35,IESAC
C23AA-1
C23AA-2
C23AB-1
(5-DOOR)
WH,0.35,2014
C
Sheet3
C23AB-1
(3-DOOR)
WH,0.35,2014
D
Sheet2
C23AB-2
(5-DOOR)
DME19A,SCR,0.35,HKEAE_IENAA
E
Sheet3
C23AB-2
(3-DOOR)
DME19AA,SCR,0.35,HKEAE_IENAA
F
Sheet2

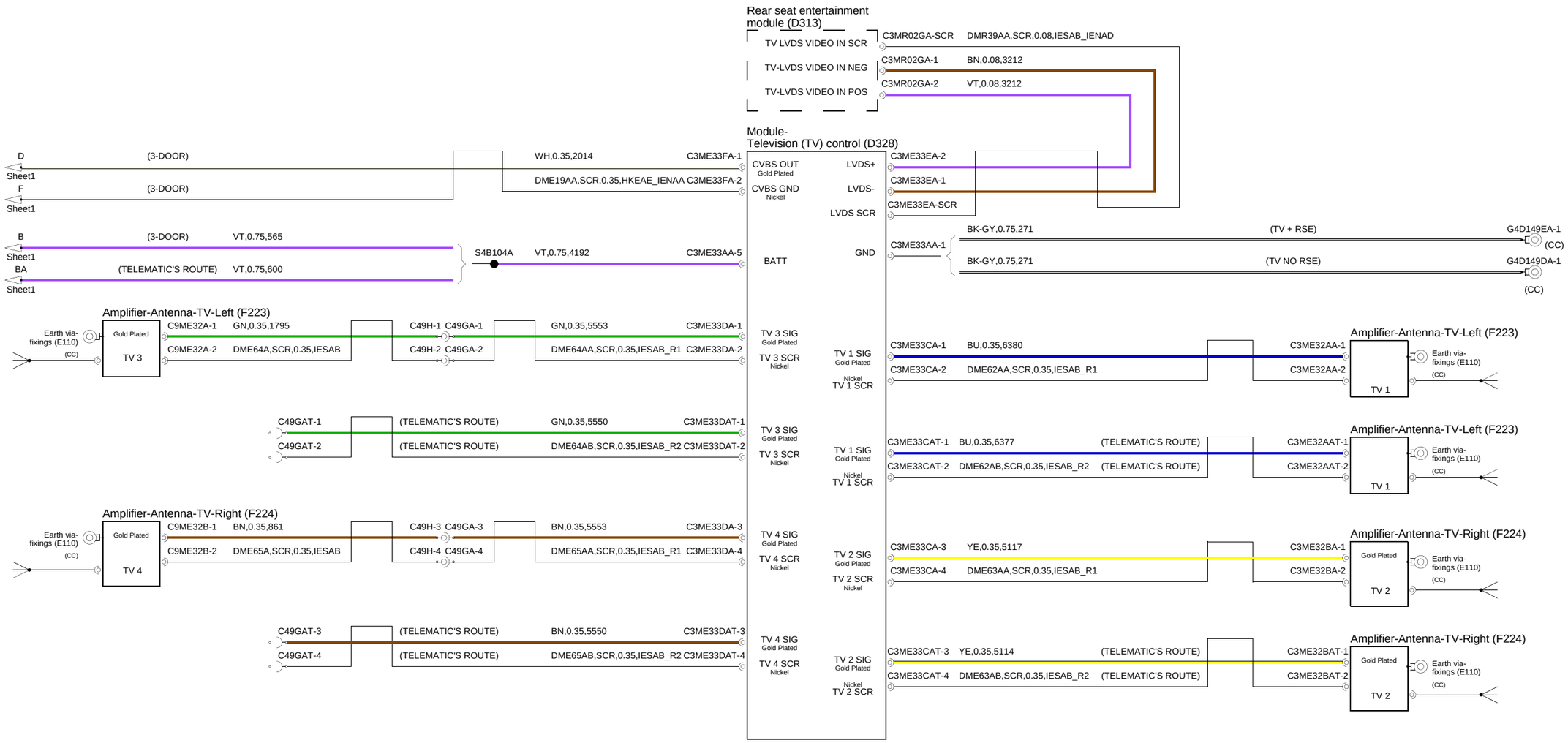
Rear seat entertainment module (D313)
TV LVDS VIDEO IN SCR
TV-LVDS VIDEO IN NEG
TV-LVDS VIDEO IN POS
C3MR02GA-SCR
DMR39AA,SCR,0.08,IESAB_IENAD
C3MR02GA-1
BN,0.08,3212
C3MR02GA-2
VT,0.08,3212
Module- Television (TV) control (D328)
CVBS OUT
Gold Plated
CVBS GND
Nickel
BATT
LVDS+
LVDS-
LVDS SCR
GND
C3ME33EA-2
C3ME33EA-1
C3ME33EA-SCR
C3ME33AA-1
BK-GY,0.75,271
(TV + RSE)
G4D149EA-1
(CC)
(TV NO RSE)
G4D149DA-1
D
(3-DOOR)
Sheet1
WH,0.35,2014
C3ME33FA-1
F
DME19AA,SCR,0.35,HKEAE_IENAA
C3ME33FA-2
B
VT,0.75,565
S4B104A
VT,0.75,4192
C3ME33AA-5
BA
(TELEMATIC'S ROUTE)
VT,0.75,600
Amplifier-Antenna-TV-Left (F223)
Earth via- fixings (E110)
Gold Plated
TV 3
C9ME32A-1
GN,0.35,1795
C49H-1
C49GA-1
GN,0.35,5553
C3ME33DA-1
C9ME32A-2
DME64A,SCR,0.35,IESAB
C49H-2
C49GA-2
DME64AA,SCR,0.35,IESAB_R1
C3ME33DA-2
TV 3 SIG
TV 3 SCR
TV 1 SIG
TV 1 SCR
C3ME33CA-1
BU,0.35,6380
C3ME32AA-1
C3ME33CA-2
DME62AA,SCR,0.35,IESAB_R1
C3ME32AA-2
TV 1
C49GAT-1
(TELEMATIC'S ROUTE)
GN,0.35,5550
C3ME33DAT-1
C49GAT-2
DME64AB,SCR,0.35,IESAB_R2
C3ME33DAT-2
C3ME33CAT-1
BU,0.35,6377
C3ME32AAT-1
C3ME33CAT-2
DME62AB,SCR,0.35,IESAB_R2
C3ME32AAT-2
Amplifier-Antenna-TV-Right (F224)
TV 4
C9ME32B-1
BN,0.35,861
C49H-3
C49GA-3
BN,0.35,5553
C3ME33DA-3
C9ME32B-2
DME65A,SCR,0.35,IESAB
C49H-4
C49GA-4
DME65AA,SCR,0.35,IESAB_R1
C3ME33DA-4
TV 4 SIG
TV 4 SCR
TV 2 SIG
TV 2 SCR
C3ME33CA-3
YE,0.35,5117
C3ME32BA-1
C3ME33CA-4
DME63AA,SCR,0.35,IESAB_R1
C3ME32BA-2
TV 2
C49GAT-3
BN,0.35,5550
C3ME33DAT-3
C49GAT-4
DME65AB,SCR,0.35,IESAB_R2
C3ME33DAT-4
C3ME33CAT-3
YE,0.35,5114
C3ME32BAT-1
C3ME33CAT-4
DME63AB,SCR,0.35,IESAB_R2
C3ME32BAT-2

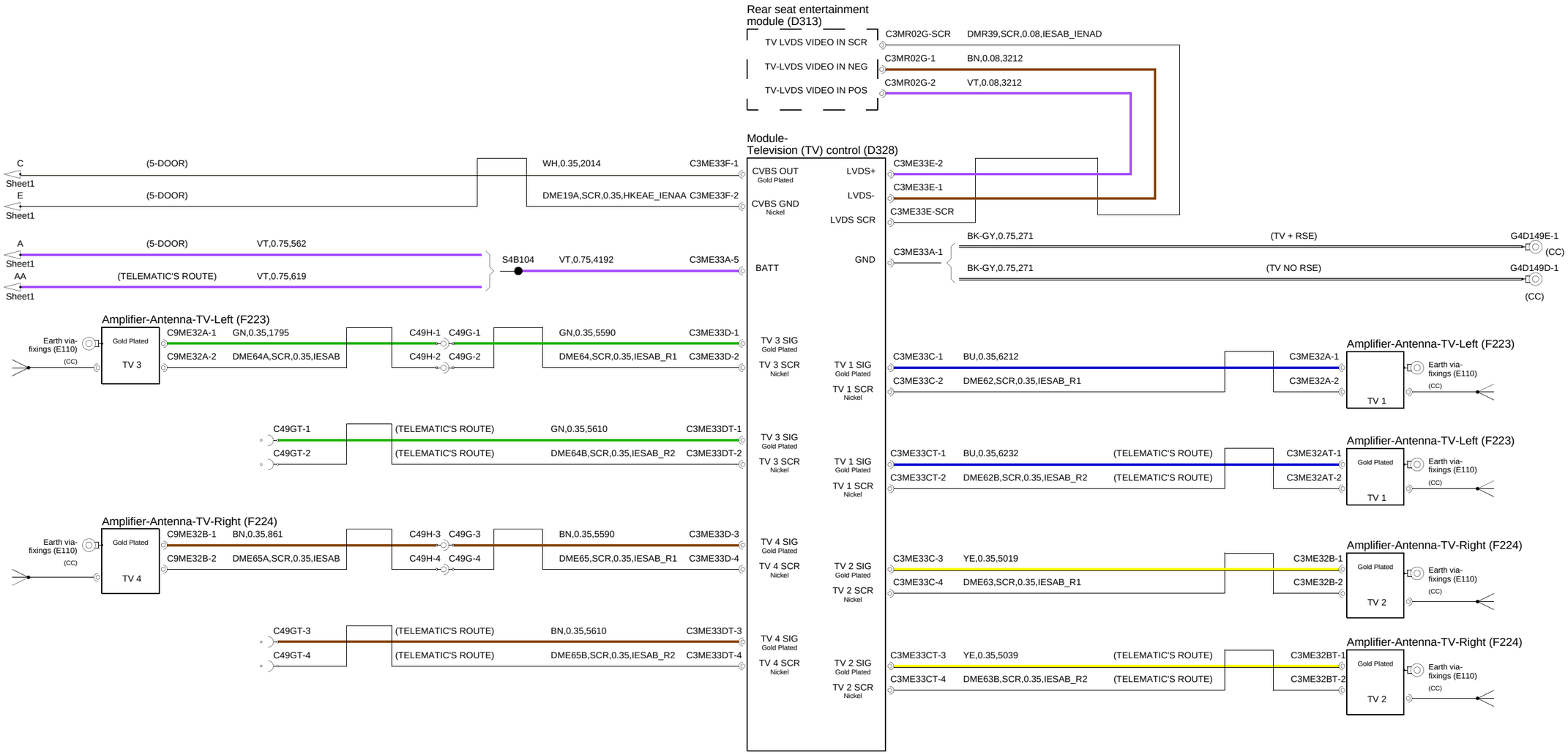
Rear seat entertainment module (D313)
TV LVDS VIDEO IN SCR
TV-LVDS VIDEO IN NEG
TV-LVDS VIDEO IN POS
C3MR02G-SCR DMR39,SCR,0.08,IESAB_IENAD
C3MR02G-1 BN,0.08,3212
C3MR02G-2 VT,0.08,3212
Module-
Television (TV) control (D328)
C (5-DOOR) WH,0.35,2014 C3ME33F-1
Sheet1
E (5-DOOR) DME19A,SCR,0.35,HKEAE_IENAA C3ME33F-2
Sheet1
CVBS OUT
Gold Plated
CVBS GND
Nickel
LVDS+
LVDS-
LVDS SCR
C3ME33E-2
C3ME33E-1
C3ME33E-SCR
A (5-DOOR) VT,0.75,562
Sheet1
AA (TELEMATIC'S ROUTE) VT,0.75,619
Sheet1
S4B104 VT,0.75,4192 C3ME33A-5
BATT
GND
C3ME33A-1
BK-GY,0.75,271 (TV + RSE) G4D149E-1
(CC)
BK-GY,0.75,271 (TV NO RSE) G4D149D-1
(CC)
Amplifier-Antenna-TV-Left (F223)
Earth via-fixings (E110)
(CC)
Gold Plated
TV 3
C9ME32A-1 GN,0.35,1795
C9ME32A-2 DME64A,SCR,0.35,IESAB
C49H-1 C49G-1
C49H-2 C49G-2
GN,0.35,5590 C3ME33D-1
DME64,SCR,0.35,IESAB_R1 C3ME33D-2
TV 3 SIG
Gold Plated
TV 3 SCR
Nickel
TV 1 SIG
Gold Plated
TV 1 SCR
Nickel
C3ME33C-1 BU,0.35,6212
C3ME33C-2 DME62,SCR,0.35,IESAB_R1
C3ME32A-1
C3ME32A-2
Amplifier-Antenna-TV-Left (F223)
Earth via-fixings (E110)
(CC)
TV 1
C49GT-1 (TELEMATIC'S ROUTE) GN,0.35,5610 C3ME33DT-1
C49GT-2 (TELEMATIC'S ROUTE) DME64B,SCR,0.35,IESAB_R2 C3ME33DT-2
TV 3 SIG
Gold Plated
TV 3 SCR
Nickel
TV 1 SIG
Gold Plated
TV 1 SCR
Nickel
C3ME33CT-1 BU,0.35,6232 (TELEMATIC'S ROUTE) C3ME32AT-1
C3ME33CT-2 DME62B,SCR,0.35,IESAB_R2 (TELEMATIC'S ROUTE) C3ME32AT-2
Amplifier-Antenna-TV-Left (F223)
Gold Plated
TV 1
Earth via-fixings (E110)
(CC)
Amplifier-Antenna-TV-Right (F224)
Earth via-fixings (E110)
(CC)
Gold Plated
TV 4
C9ME32B-1 BN,0.35,861
C9ME32B-2 DME65A,SCR,0.35,IESAB
C49H-3 C49G-3
C49H-4 C49G-4
BN,0.35,5590 C3ME33D-3
DME65,SCR,0.35,IESAB_R1 C3ME33D-4
TV 4 SIG
Gold Plated
TV 4 SCR
Nickel
TV 2 SIG
Gold Plated
TV 2 SCR
Nickel
C3ME33C-3 YE,0.35,5019
C3ME33C-4 DME63,SCR,0.35,IESAB_R1
C3ME32B-1
C3ME32B-2
Amplifier-Antenna-TV-Right (F224)
Gold Plated
TV 2
Earth via-fixings (E110)
(CC)
C49GT-3 (TELEMATIC'S ROUTE) BN,0.35,5610 C3ME33DT-3
C49GT-4 (TELEMATIC'S ROUTE) DME65B,SCR,0.35,IESAB_R2 C3ME33DT-4
TV 4 SIG
Gold Plated
TV 4 SCR
Nickel
TV 2 SIG
Gold Plated
TV 2 SCR
Nickel
C3ME33CT-3 YE,0.35,5039 (TELEMATIC'S ROUTE) C3ME32BT-1
C3ME33CT-4 DME63B,SCR,0.35,IESAB_R2 (TELEMATIC'S ROUTE) C3ME32BT-2
Amplifier-Antenna-TV-Right (F224)
Gold Plated
TV 2
Earth via-fixings (E110)
(CC)

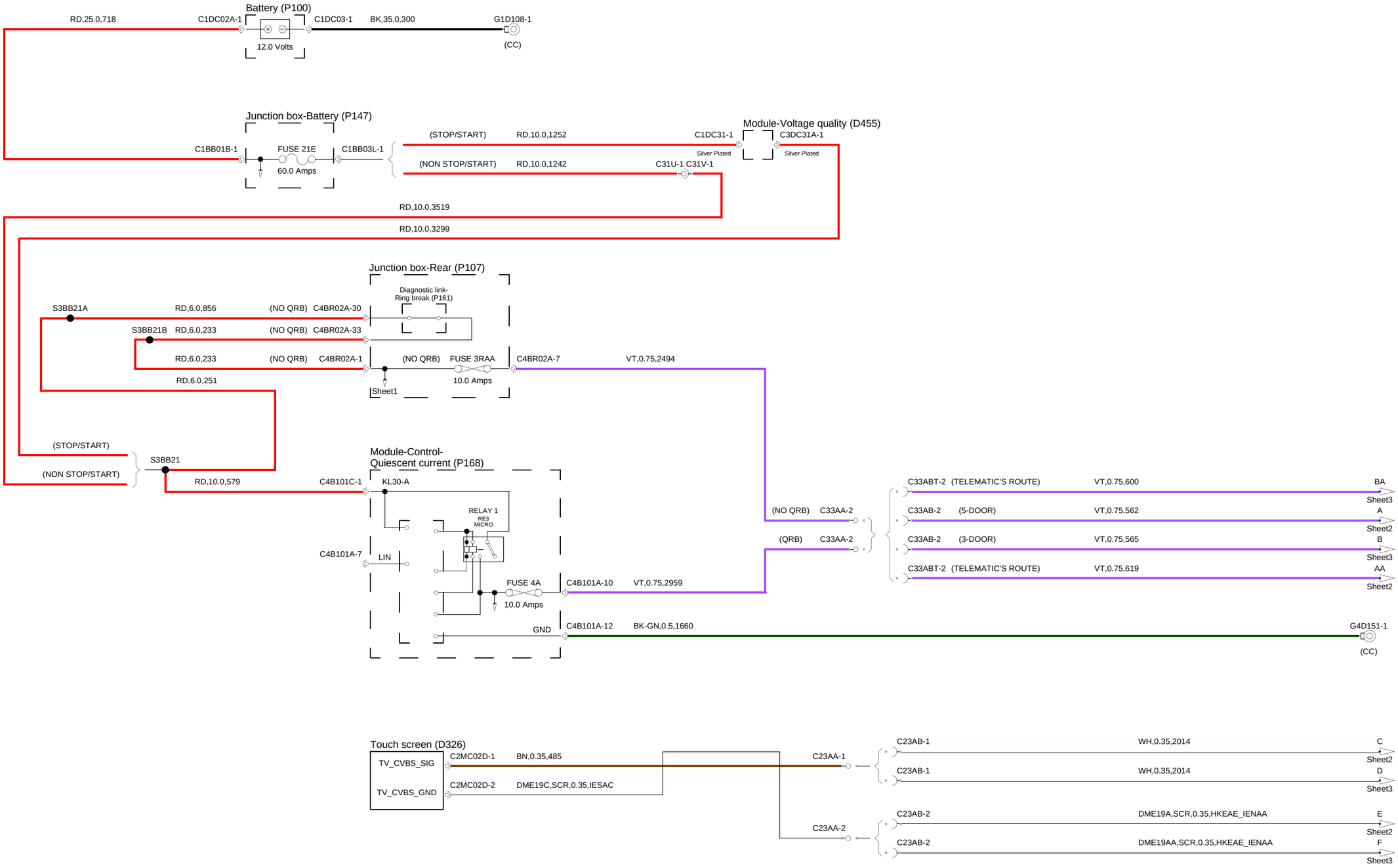
Battery (P100)
RD,25.0,718
C1DC02A-1
C1DC03-1
BK,35.0,300
G1D108-1
12.0 Volts
(CC)
Junction box-Battery (P147)
C1BB01B-1
FUSE 21E
60.0 Amps
C1BB03L-1
(STOP/START)
RD,10.0,1252
(NON STOP/START)
RD,10.0,1242
C1DC31-1
Silver Plated
C31U-1 C31V-1
Module-Voltage quality (D455)
C3DC31A-1
Silver Plated
RD,10.0,3519
RD,10.0,3299
Junction box-Rear (P107)
Diagnostic link-
Ring break (P161)
S3BB21A
RD,6.0,856
(NO QRB)
C4BR02A-30
S3BB21B
RD,6.0,233
(NO QRB)
C4BR02A-33
RD,6.0,233
(NO QRB)
C4BR02A-1
(NO QRB)
FUSE 3RAA
10.0 Amps
C4BR02A-7
VT,0.75,2494
RD,6.0,251
Sheet1
(STOP/START)
(NON STOP/START)
S3BB21
RD,10.0,579
C4B101C-1
Module-Control-
Quiescent current (P168)
KL30-A
RELAY 1
RE3
MICRO
C4B101A-7
LIN
FUSE 4A
10.0 Amps
C4B101A-10
VT,0.75,2959
GND
C4B101A-12
BK-GN,0.5,1660
G4D151-1
(CC)
(NO QRB)
C33AA-2
(QRB)
C33AA-2
C33ABT-2
(TELEMATIC'S ROUTE)
VT,0.75,600
BA
Sheet3
C33AB-2
(5-DOOR)
VT,0.75,562
A
Sheet2
C33AB-2
(3-DOOR)
VT,0.75,565
B
Sheet3
C33ABT-2
(TELEMATIC'S ROUTE)
VT,0.75,619
AA
Sheet2
Touch screen (D326)
TV_CVBS_SIG
TV_CVBS_GND
C2MC02D-1
BN,0.35,485
C2MC02D-2
DME19C,SCR,0.35,IESAC
C23AA-1
C23AA-2
C23AB-1
WH,0.35,2014
C
Sheet2
C23AB-1
WH,0.35,2014
D
Sheet3
C23AB-2
DME19A,SCR,0.35,HKEAE_IENAA
E
Sheet2
C23AB-2
DME19AA,SCR,0.35,HKEAE_IENAA
F
Sheet3

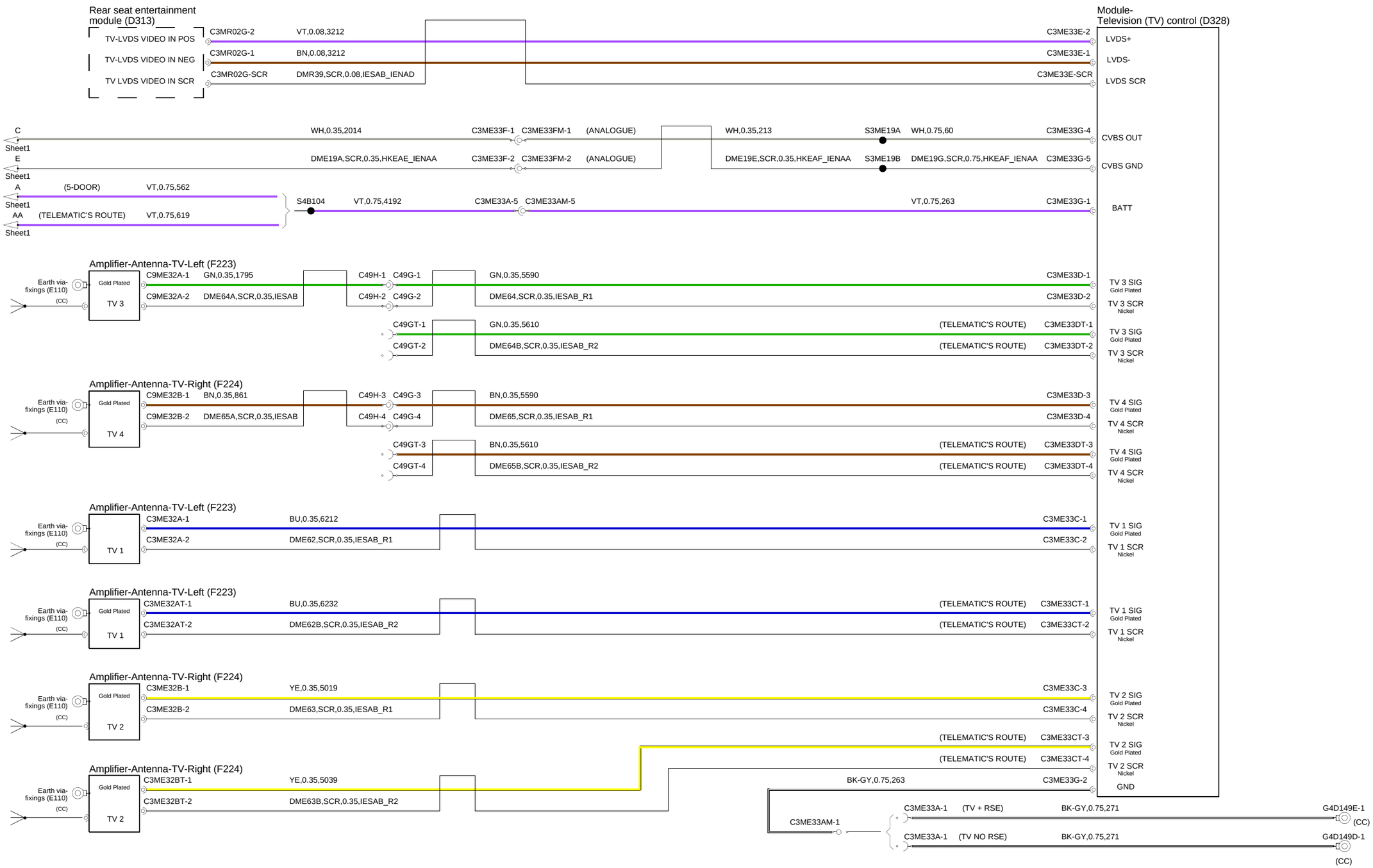
Rear seat entertainment module (D313)
TV-LVDS VIDEO IN POS
TV-LVDS VIDEO IN NEG
TV LVDS VIDEO IN SCR
C3MR02G-2 VT,0.08,3212 C3ME33E-2 LVDS+
C3MR02G-1 BN,0.08,3212 C3ME33E-1 LVDS-
C3MR02G-SCR DMR39,SCR,0.08,IESAB_IENAD C3ME33E-SCR LVDS SCR
Module-Television (TV) control (D328)
C Sheet1 WH,0.35,2014 C3ME33F-1 C3ME33FM-1 (ANALOGUE) WH,0.35,213 S3ME19A WH,0.75,60 C3ME33G-4 CVBS OUT
E Sheet1 DME19A,SCR,0.35,HKEAE_IENAA C3ME33F-2 C3ME33FM-2 (ANALOGUE) DME19E,SCR,0.35,HKEAF_IENAA S3ME19B DME19G,SCR,0.75,HKEAF_IENAA C3ME33G-5 CVBS GND
A Sheet1 (5-DOOR) VT,0.75,562
AA Sheet1 (TELEMATIC'S ROUTE) VT,0.75,619
S4B104 VT,0.75,4192 C3ME33A-5 C3ME33AM-5 VT,0.75,263 C3ME33G-1 BATT
Amplifier-Antenna-TV-Left (F223)
Earth via-fixings (E110) (CC)
Gold Plated TV 3
C9ME32A-1 GN,0.35,1795 C49H-1 C49G-1 GN,0.35,5590 C3ME33D-1 TV 3 SIG Gold Plated
C9ME32A-2 DME64A,SCR,0.35,IESAB C49H-2 C49G-2 DME64,SCR,0.35,IESAB_R1 C3ME33D-2 TV 3 SCR Nickel
C49GT-1 GN,0.35,5610 (TELEMATIC'S ROUTE) C3ME33DT-1 TV 3 SIG Gold Plated
C49GT-2 DME64B,SCR,0.35,IESAB_R2 (TELEMATIC'S ROUTE) C3ME33DT-2 TV 3 SCR Nickel
Amplifier-Antenna-TV-Right (F224)
Earth via-fixings (E110) (CC)
Gold Plated TV 4
C9ME32B-1 BN,0.35,861 C49H-3 C49G-3 BN,0.35,5590 C3ME33D-3 TV 4 SIG Gold Plated
C9ME32B-2 DME65A,SCR,0.35,IESAB C49H-4 C49G-4 DME65,SCR,0.35,IESAB_R1 C3ME33D-4 TV 4 SCR Nickel
C49GT-3 BN,0.35,5610 (TELEMATIC'S ROUTE) C3ME33DT-3 TV 4 SIG Gold Plated
C49GT-4 DME65B,SCR,0.35,IESAB_R2 (TELEMATIC'S ROUTE) C3ME33DT-4 TV 4 SCR Nickel
Amplifier-Antenna-TV-Left (F223)
Earth via-fixings (E110) (CC)
TV 1
C3ME32A-1 BU,0.35,6212 C3ME33C-1 TV 1 SIG Gold Plated
C3ME32A-2 DME62,SCR,0.35,IESAB_R1 C3ME33C-2 TV 1 SCR Nickel
Amplifier-Antenna-TV-Left (F223)
Earth via-fixings (E110) (CC)
Gold Plated TV 1
C3ME32AT-1 BU,0.35,6232 (TELEMATIC'S ROUTE) C3ME33CT-1 TV 1 SIG Gold Plated
C3ME32AT-2 DME62B,SCR,0.35,IESAB_R2 (TELEMATIC'S ROUTE) C3ME33CT-2 TV 1 SCR Nickel
Amplifier-Antenna-TV-Right (F224)
Earth via-fixings (E110) (CC)
Gold Plated TV 2
C3ME32B-1 YE,0.35,5019 C3ME33C-3 TV 2 SIG Gold Plated
C3ME32B-2 DME63,SCR,0.35,IESAB_R1 C3ME33C-4 TV 2 SCR Nickel
(TELEMATIC'S ROUTE) C3ME33CT-3 TV 2 SIG Gold Plated
(TELEMATIC'S ROUTE) C3ME33CT-4 TV 2 SCR Nickel
Amplifier-Antenna-TV-Right (F224)
Earth via-fixings (E110) (CC)
Gold Plated TV 2
C3ME32BT-1 YE,0.35,5039 BK-GY,0.75,263 C3ME33G-2 GND
C3ME32BT-2 DME63B,SCR,0.35,IESAB_R2
C3ME33AM-1
C3ME33A-1 (TV + RSE) BK-GY,0.75,271 G4D149E-1 (CC)
C3ME33A-1 (TV NO RSE) BK-GY,0.75,271 G4D149D-1 (CC)

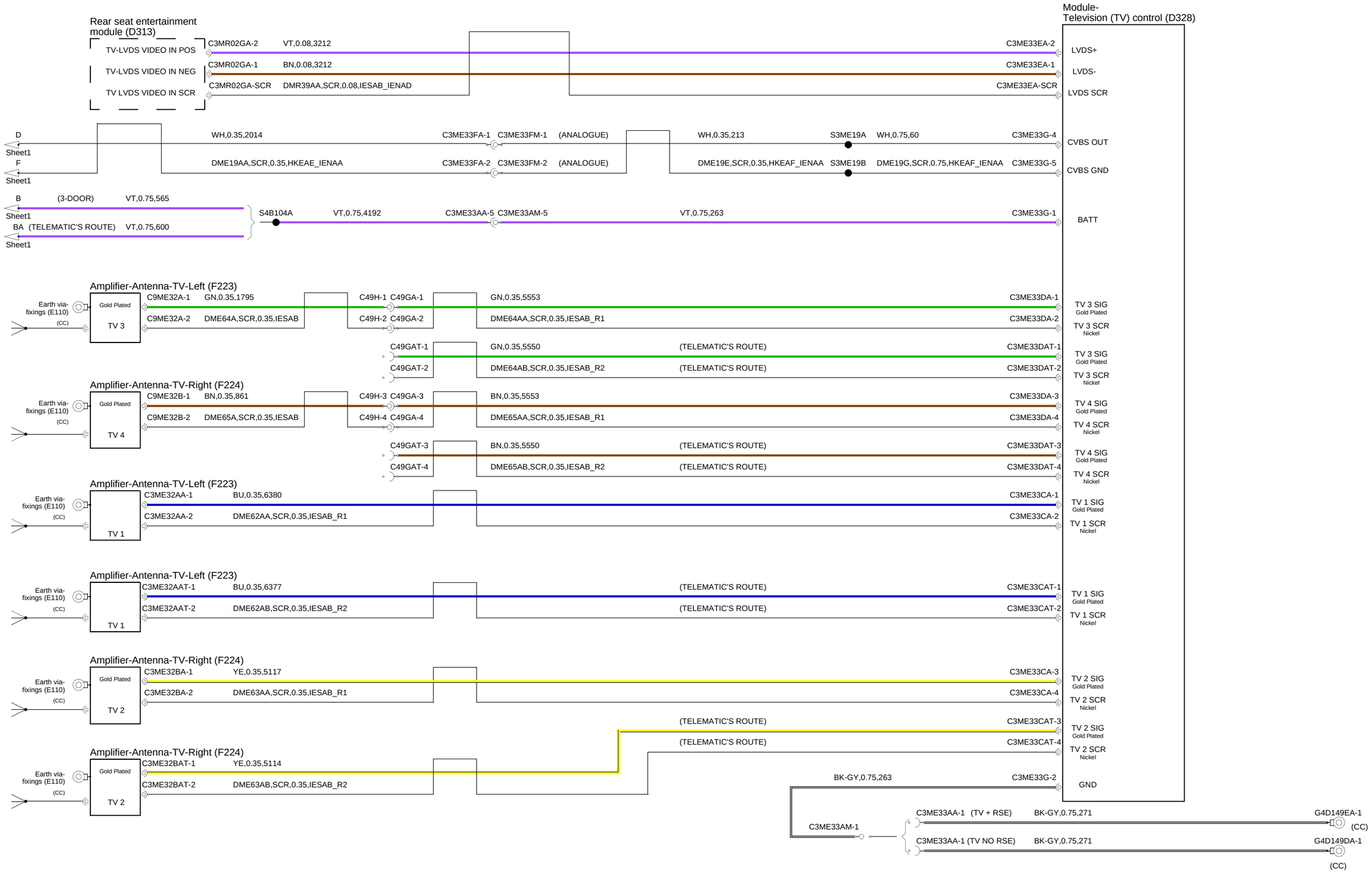
Module-
Television (TV) control (D328)
Rear seat entertainment
module (D313)
TV-LVDS VIDEO IN POS
TV-LVDS VIDEO IN NEG
TV LVDS VIDEO IN SCR
C3MR02GA-2 VT,0.08,3212
C3MR02GA-1 BN,0.08,3212
C3MR02GA-SCR DMR39AA,SCR,0.08,IESAB_IENAD
C3ME33EA-2
C3ME33EA-1
C3ME33EA-SCR
LVDS+
LVDS-
LVDS SCR
D
Sheet1
F
Sheet1
WH,0.35,2014
C3ME33FA-1 C3ME33FM-1 (ANALOGUE)
WH,0.35,213
S3ME19A WH,0.75,60
C3ME33G-4
CVBS OUT
DME19AA,SCR,0.35,HKEAE_IENAA
C3ME33FA-2 C3ME33FM-2 (ANALOGUE)
DME19E,SCR,0.35,HKEAF_IENAA S3ME19B DME19G,SCR,0.75,HKEAF_IENAA
C3ME33G-5
CVBS GND
B (3-DOOR) VT,0.75,565
Sheet1
BA (TELEMATIC'S ROUTE) VT,0.75,600
Sheet1
S4B104A VT,0.75,4192
C3ME33AA-5 C3ME33AM-5
VT,0.75,263
C3ME33G-1
BATT
Amplifier-Antenna-TV-Left (F223)
Earth via-
fixings (E110)
(CC)
Gold Plated
TV 3
C9ME32A-1 GN,0.35,1795
C49H-1 C49GA-1
GN,0.35,5553
C3ME33DA-1
TV 3 SIG
Gold Plated
C9ME32A-2 DME64A,SCR,0.35,IESAB
C49H-2 C49GA-2
DME64AA,SCR,0.35,IESAB_R1
C3ME33DA-2
TV 3 SCR
Nickel
C49GAT-1
GN,0.35,5550
(TELEMATIC'S ROUTE)
C3ME33DAT-1
TV 3 SIG
Gold Plated
C49GAT-2
DME64AB,SCR,0.35,IESAB_R2
(TELEMATIC'S ROUTE)
C3ME33DAT-2
TV 3 SCR
Nickel
Amplifier-Antenna-TV-Right (F224)
Earth via-
fixings (E110)
(CC)
Gold Plated
TV 4
C9ME32B-1 BN,0.35,861
C49H-3 C49GA-3
BN,0.35,5553
C3ME33DA-3
TV 4 SIG
Gold Plated
C9ME32B-2 DME65A,SCR,0.35,IESAB
C49H-4 C49GA-4
DME65AA,SCR,0.35,IESAB_R1
C3ME33DA-4
TV 4 SCR
Nickel
C49GAT-3
BN,0.35,5550
(TELEMATIC'S ROUTE)
C3ME33DAT-3
TV 4 SIG
Gold Plated
C49GAT-4
DME65AB,SCR,0.35,IESAB_R2
(TELEMATIC'S ROUTE)
C3ME33DAT-4
TV 4 SCR
Nickel
Amplifier-Antenna-TV-Left (F223)
Earth via-
fixings (E110)
(CC)
TV 1
C3ME32AA-1 BU,0.35,6380
C3ME33CA-1
TV 1 SIG
Gold Plated
C3ME32AA-2 DME62AA,SCR,0.35,IESAB_R1
C3ME33CA-2
TV 1 SCR
Nickel
Amplifier-Antenna-TV-Left (F223)
Earth via-
fixings (E110)
(CC)
TV 1
C3ME32AAT-1 BU,0.35,6377
(TELEMATIC'S ROUTE)
C3ME33CAT-1
TV 1 SIG
Gold Plated
C3ME32AAT-2 DME62AB,SCR,0.35,IESAB_R2
(TELEMATIC'S ROUTE)
C3ME33CAT-2
TV 1 SCR
Nickel
Amplifier-Antenna-TV-Right (F224)
Earth via-
fixings (E110)
(CC)
Gold Plated
TV 2
C3ME32BA-1 YE,0.35,5117
C3ME33CA-3
TV 2 SIG
Gold Plated
C3ME32BA-2 DME63AA,SCR,0.35,IESAB_R1
C3ME33CA-4
TV 2 SCR
Nickel
(TELEMATIC'S ROUTE)
C3ME33CAT-3
TV 2 SIG
Gold Plated
(TELEMATIC'S ROUTE)
C3ME33CAT-4
TV 2 SCR
Nickel
Amplifier-Antenna-TV-Right (F224)
Earth via-
fixings (E110)
(CC)
Gold Plated
TV 2
C3ME32BAT-1 YE,0.35,5114
C3ME32BAT-2 DME63AB,SCR,0.35,IESAB_R2
BK-GY,0.75,263
C3ME33G-2
GND
C3ME33AM-1
C3ME33AA-1 (TV + RSE) BK-GY,0.75,271
G4D149EA-1
(CC)
C3ME33AA-1 (TV NO RSE) BK-GY,0.75,271
G4D149DA-1
(CC)

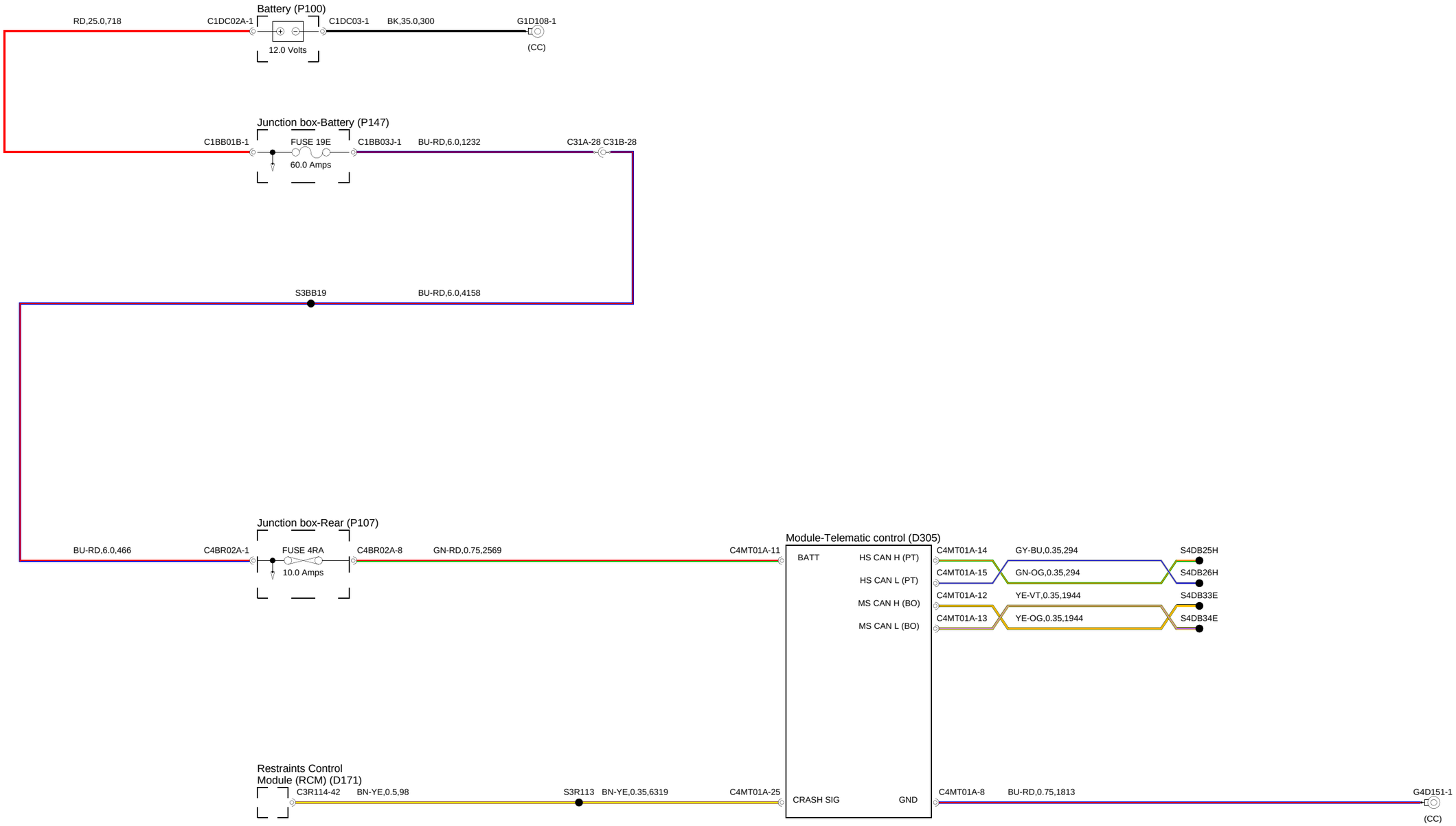
Battery (P100)
RD,25.0,718
C1DC02A-1
C1DC03-1
BK,35.0,300
G1D108-1
12.0 Volts
(CC)
Junction box-Battery (P147)
C1BB01B-1
FUSE 19E
60.0 Amps
C1BB03J-1
BU-RD,6.0,1232
C31A-28 C31B-28
S3BB19
BU-RD,6.0,4158
Junction box-Rear (P107)
BU-RD,6.0,466
C4BR02A-1
FUSE 4RA
10.0 Amps
C4BR02A-8
GN-RD,0.75,2569
C4MT01A-11
Module-Telematic control (D305)
BATT
HS CAN H (PT)
HS CAN L (PT)
MS CAN H (BO)
MS CAN L (BO)
CRASH SIG
GND
C4MT01A-14
GY-BU,0.35,294
S4DB25H
C4MT01A-15
GN-OG,0.35,294
S4DB26H
C4MT01A-12
YE-VT,0.35,1944
S4DB33E
C4MT01A-13
YE-OG,0.35,1944
S4DB34E
Restraints Control
Module (RCM) (D171)
C3R114-42
BN-YE,0.5,98
S3R113
BN-YE,0.35,6319
C4MT01A-25
C4MT01A-8
BU-RD,0.75,1813
G4D151-1
(CC)

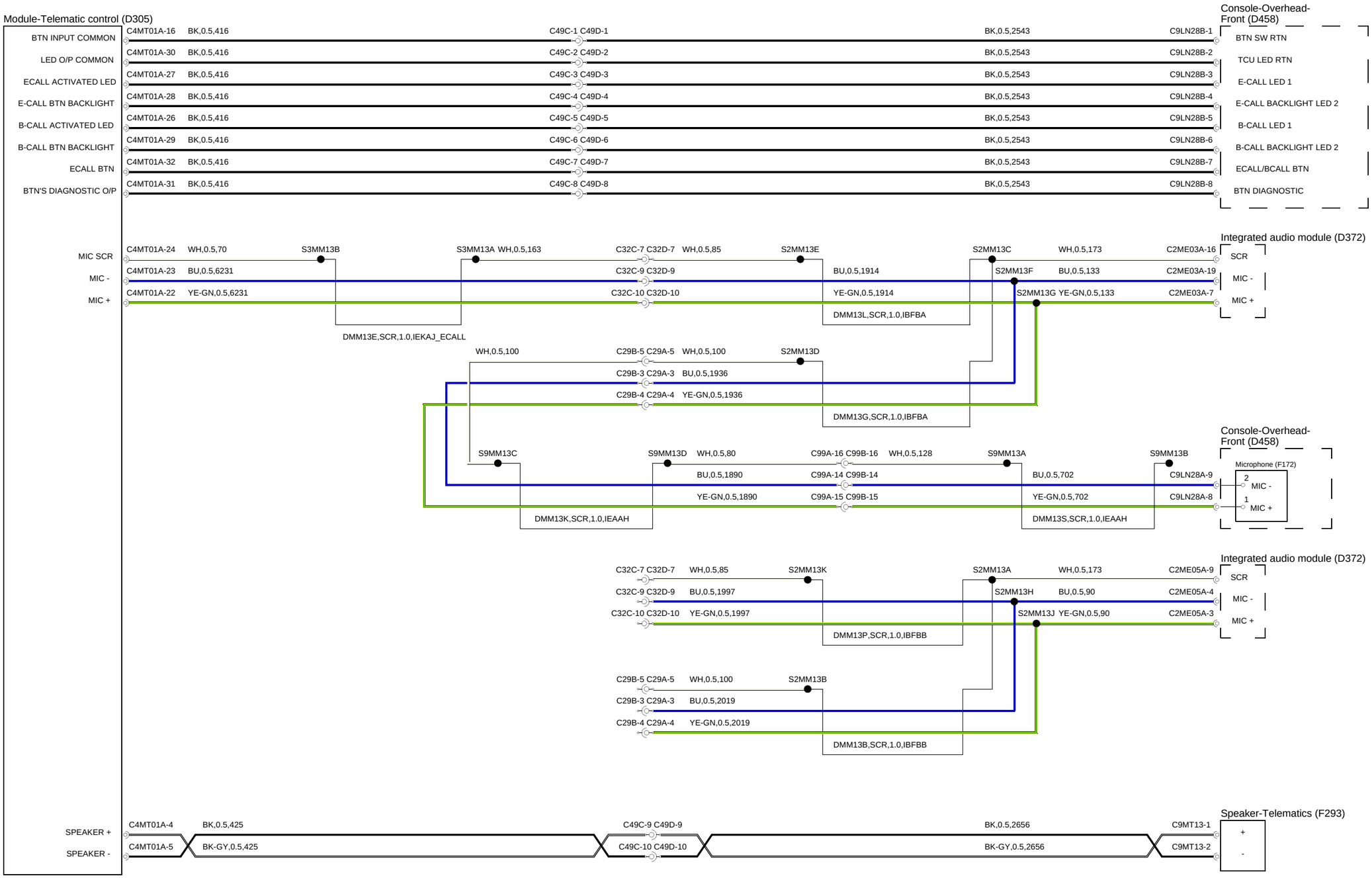
Module-Telematic control (D305)
BTN INPUT COMMON
LED O/P COMMON
ECALL ACTIVATED LED
E-CALL BTN BACKLIGHT
B-CALL ACTIVATED LED
B-CALL BTN BACKLIGHT
ECALL BTN
BTN'S DIAGNOSTIC O/P
C4MT01A-16 BK,0.5,416 C49C-1 C49D-1 BK,0.5,2543 C9LN28B-1
C4MT01A-30 BK,0.5,416 C49C-2 C49D-2 BK,0.5,2543 C9LN28B-2
C4MT01A-27 BK,0.5,416 C49C-3 C49D-3 BK,0.5,2543 C9LN28B-3
C4MT01A-28 BK,0.5,416 C49C-4 C49D-4 BK,0.5,2543 C9LN28B-4
C4MT01A-26 BK,0.5,416 C49C-5 C49D-5 BK,0.5,2543 C9LN28B-5
C4MT01A-29 BK,0.5,416 C49C-6 C49D-6 BK,0.5,2543 C9LN28B-6
C4MT01A-32 BK,0.5,416 C49C-7 C49D-7 BK,0.5,2543 C9LN28B-7
C4MT01A-31 BK,0.5,416 C49C-8 C49D-8 BK,0.5,2543 C9LN28B-8
Console-Overhead-Front (D458)
BTN SW RTN
TCU LED RTN
E-CALL LED 1
E-CALL BACKLIGHT LED 2
B-CALL LED 1
B-CALL BACKLIGHT LED 2
ECALL/BCALL BTN
BTN DIAGNOSTIC
MIC SCR
MIC -
MIC +
C4MT01A-24 WH,0.5,70 S3MM13B S3MM13A WH,0.5,163 C32C-7 C32D-7 WH,0.5,85 S2MM13E S2MM13C WH,0.5,173 C2ME03A-16
C4MT01A-23 BU,0.5,6231 C32C-9 C32D-9 BU,0.5,1914 S2MM13F BU,0.5,133 C2ME03A-19
C4MT01A-22 YE-GN,0.5,6231 C32C-10 C32D-10 YE-GN,0.5,1914 S2MM13G YE-GN,0.5,133 C2ME03A-7
DMM13L,SCR,1.0,IBFBA
DMM13E,SCR,1.0,IEKAJ_ECALL
Integrated audio module (D372)
SCR
MIC -
MIC +
WH,0.5,100 C29B-5 C29A-5 WH,0.5,100 S2MM13D
C29B-3 C29A-3 BU,0.5,1936
C29B-4 C29A-4 YE-GN,0.5,1936
DMM13G,SCR,1.0,IBFBA
S9MM13C S9MM13D WH,0.5,80 C99A-16 C99B-16 WH,0.5,128 S9MM13A S9MM13B
BU,0.5,1890 C99A-14 C99B-14 BU,0.5,702 C9LN28A-9
YE-GN,0.5,1890 C99A-15 C99B-15 YE-GN,0.5,702 C9LN28A-8
DMM13K,SCR,1.0,IEAAH
DMM13S,SCR,1.0,IEAAH
Console-Overhead-Front (D458)
Microphone (F172)
2 MIC -
1 MIC +
C32C-7 C32D-7 WH,0.5,85 S2MM13K S2MM13A WH,0.5,173 C2ME05A-9
C32C-9 C32D-9 BU,0.5,1997 S2MM13H BU,0.5,90 C2ME05A-4
C32C-10 C32D-10 YE-GN,0.5,1997 S2MM13J YE-GN,0.5,90 C2ME05A-3
DMM13P,SCR,1.0,IBFBB
Integrated audio module (D372)
SCR
MIC -
MIC +
C29B-5 C29A-5 WH,0.5,100 S2MM13B
C29B-3 C29A-3 BU,0.5,2019
C29B-4 C29A-4 YE-GN,0.5,2019
DMM13B,SCR,1.0,IBFBB
SPEAKER +
SPEAKER -
C4MT01A-4 BK,0.5,425 C49C-9 C49D-9 BK,0.5,2656 C9MT13-1
C4MT01A-5 BK-GY,0.5,425 C49C-10 C49D-10 BK-GY,0.5,2656 C9MT13-2
Speaker-Telematics (F293)
+
-

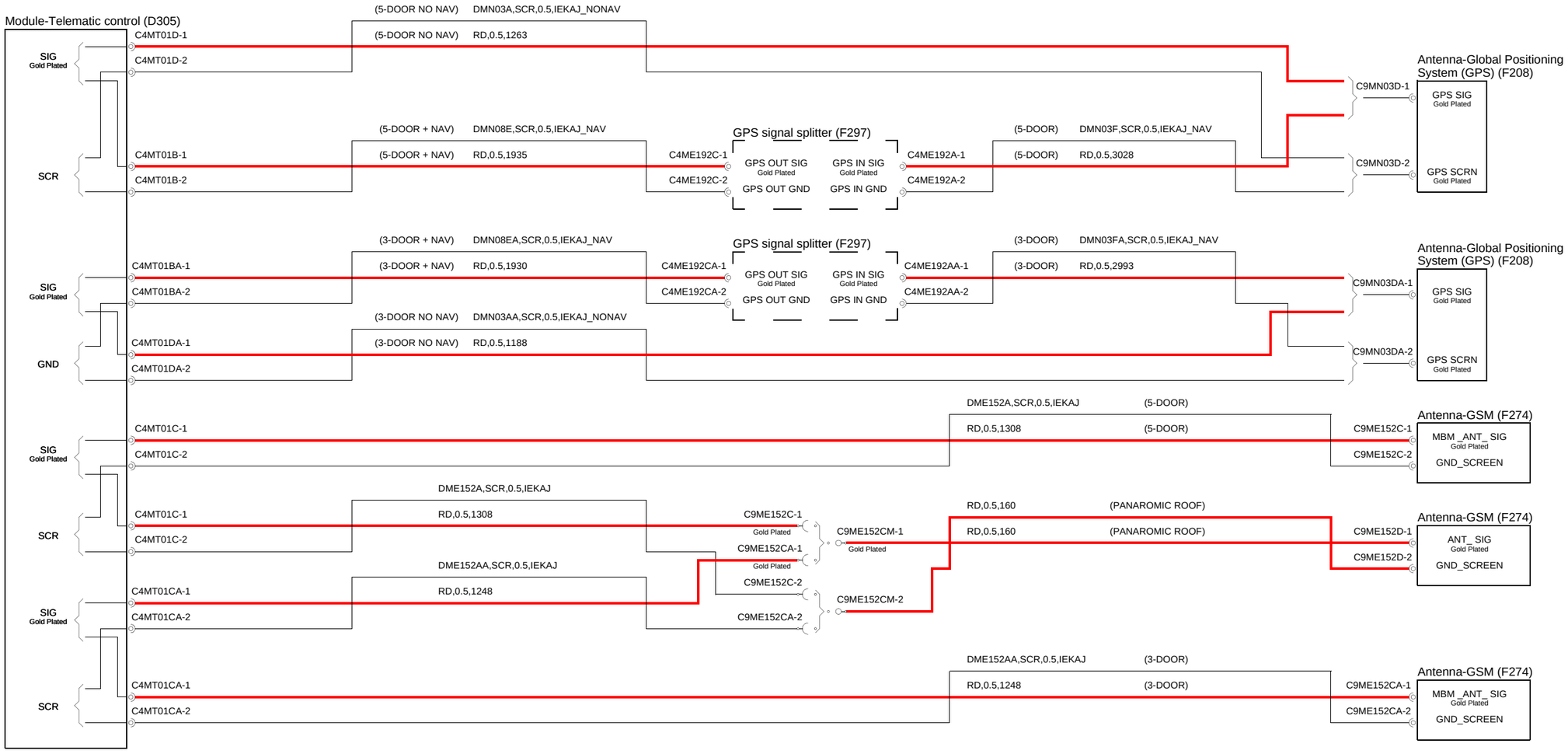
Module-Telematic control (D305)
SIG
Gold Plated
C4MT01D-1
C4MT01D-2
(5-DOOR NO NAV)
DMN03A,SCR,0.5,IEKAJ_NONAV
(5-DOOR NO NAV)
RD,0.5,1263
Antenna-Global Positioning System (GPS) (F208)
C9MN03D-1
GPS SIG
Gold Plated
SCR
C4MT01B-1
C4MT01B-2
(5-DOOR + NAV)
DMN08E,SCR,0.5,IEKAJ_NAV
(5-DOOR + NAV)
RD,0.5,1935
C4ME192C-1
C4ME192C-2
GPS signal splitter (F297)
GPS OUT SIG
Gold Plated
GPS IN SIG
Gold Plated
GPS OUT GND
GPS IN GND
C4ME192A-1
C4ME192A-2
(5-DOOR)
DMN03F,SCR,0.5,IEKAJ_NAV
(5-DOOR)
RD,0.5,3028
C9MN03D-2
GPS SCRN
Gold Plated
SIG
Gold Plated
C4MT01BA-1
C4MT01BA-2
(3-DOOR + NAV)
DMN08EA,SCR,0.5,IEKAJ_NAV
(3-DOOR + NAV)
RD,0.5,1930
C4ME192CA-1
C4ME192CA-2
GPS signal splitter (F297)
GPS OUT SIG
Gold Plated
GPS IN SIG
Gold Plated
GPS OUT GND
GPS IN GND
C4ME192AA-1
C4ME192AA-2
(3-DOOR)
DMN03FA,SCR,0.5,IEKAJ_NAV
(3-DOOR)
RD,0.5,2993
Antenna-Global Positioning System (GPS) (F208)
C9MN03DA-1
GPS SIG
Gold Plated
GND
C4MT01DA-1
C4MT01DA-2
(3-DOOR NO NAV)
DMN03AA,SCR,0.5,IEKAJ_NONAV
(3-DOOR NO NAV)
RD,0.5,1188
C9MN03DA-2
GPS SCRN
Gold Plated
SIG
Gold Plated
C4MT01C-1
C4MT01C-2
DME152A,SCR,0.5,IEKAJ
RD,0.5,1308
(5-DOOR)
(5-DOOR)
Antenna-GSM (F274)
C9ME152C-1
C9ME152C-2
MBM _ANT_ SIG
Gold Plated
GND_SCREEN
SCR
C4MT01C-1
C4MT01C-2
DME152A,SCR,0.5,IEKAJ
RD,0.5,1308
C9ME152C-1
Gold Plated
C9ME152CM-1
Gold Plated
C9ME152CA-1
Gold Plated
RD,0.5,160
(PANAROMIC ROOF)
RD,0.5,160
(PANAROMIC ROOF)
Antenna-GSM (F274)
C9ME152D-1
C9ME152D-2
ANT_ SIG
Gold Plated
GND_SCREEN
SIG
Gold Plated
C4MT01CA-1
C4MT01CA-2
DME152AA,SCR,0.5,IEKAJ
RD,0.5,1248
C9ME152C-2
C9ME152CM-2
C9ME152CA-2
SCR
C4MT01CA-1
C4MT01CA-2
DME152AA,SCR,0.5,IEKAJ
RD,0.5,1248
(3-DOOR)
(3-DOOR)
Antenna-GSM (F274)
C9ME152CA-1
C9ME152CA-2
MBM _ANT_ SIG
Gold Plated
GND_SCREEN